BACHTEL GROUP

GENERAL CATALOGUE

THE MODULAR SYSTEM FOR CUSTOMISED CONSTRUCTION SOLUTIONS

Summary of contents

Welcome to KANYA

Aluminium modular assembly system with infinite possibilities

PVS®

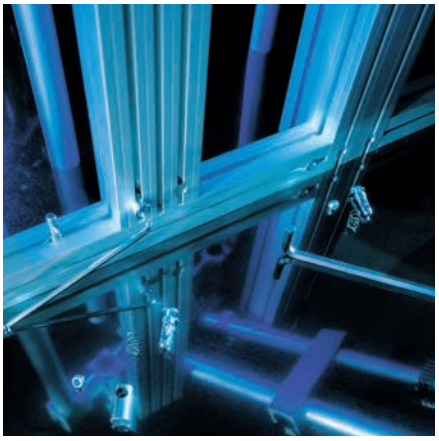

RVS®

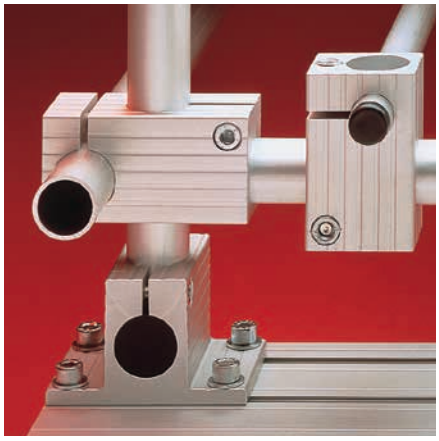

PVS®
Extrusion connecting system

RVS®
Tube clamp system

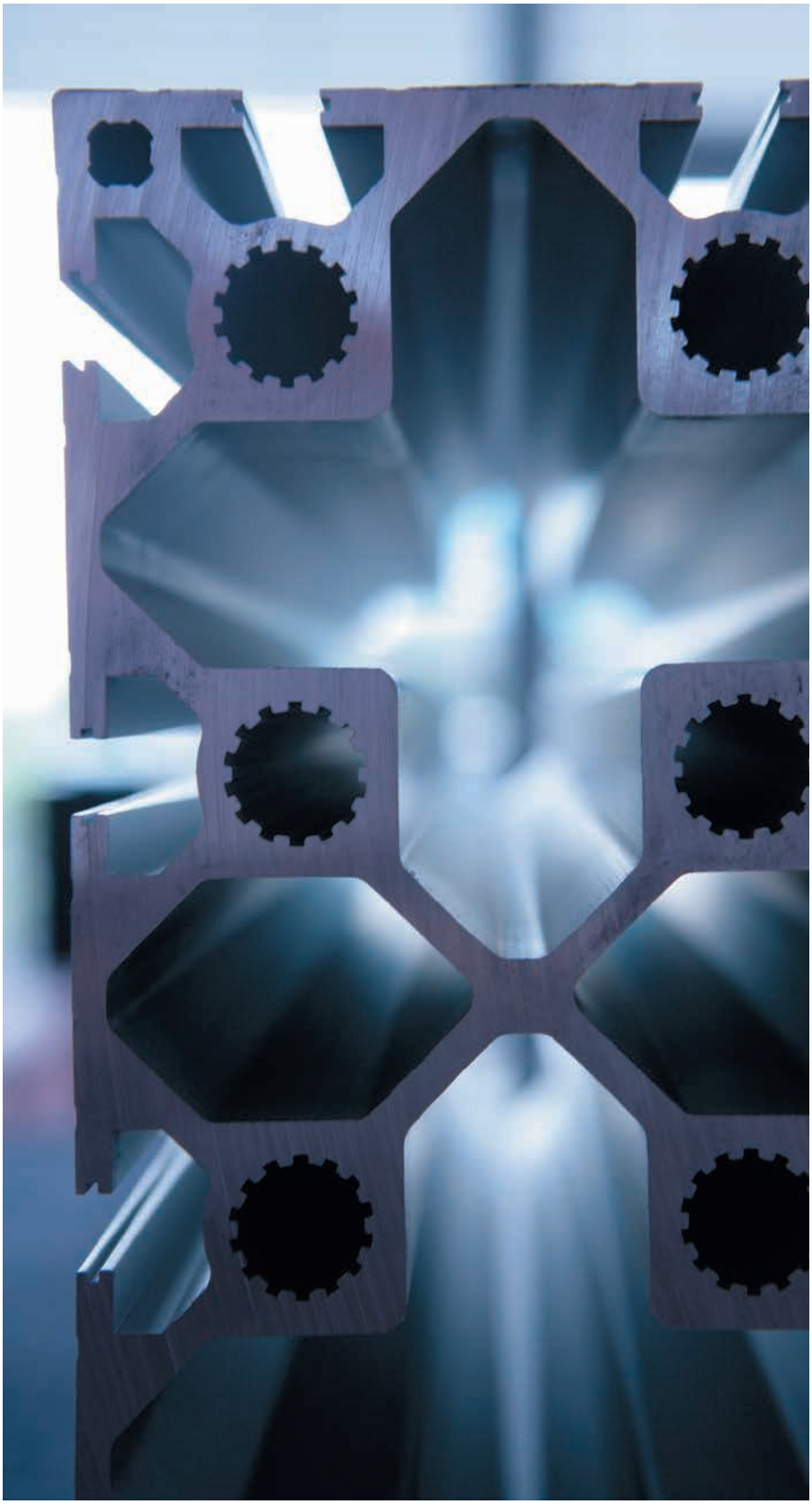

KANYA – Aluminium modular assembly system with infinite possibilities:
Modular, innovative, flexible and quick.

Since its founding in 1974, KANYA and our partners live by the principle that we are not satisfied until you are. Our goals are geared towards the needs of our customers:
High product and service quality, punctual with deliveries and optimum price/performance ratio. For the environment‘s sake, we maintain sustainable business ethics.

Years of experience in technical advice and engineering has immense influence on the products for our customers – with global support from our international distribution network. Let us take on your challenge. Together we will provide the best solution for your requirements.
Our team offers support from the project planning stage to final acceptance – see for yourself the modular possibilities of our extrusion connecting system PVS® and tube clamp system RVS®.

This General catalogue includes both the PVS® and RVS® range with many new innovations. The continuous development of our products enables your projects to always be implemented more economically. KANYA is your aluminium modular assembly system for infinite possibilities!

Your KANYA Team

Modularity

Technical advice from engineers who understand customer requirements and further develop innovative ideas.

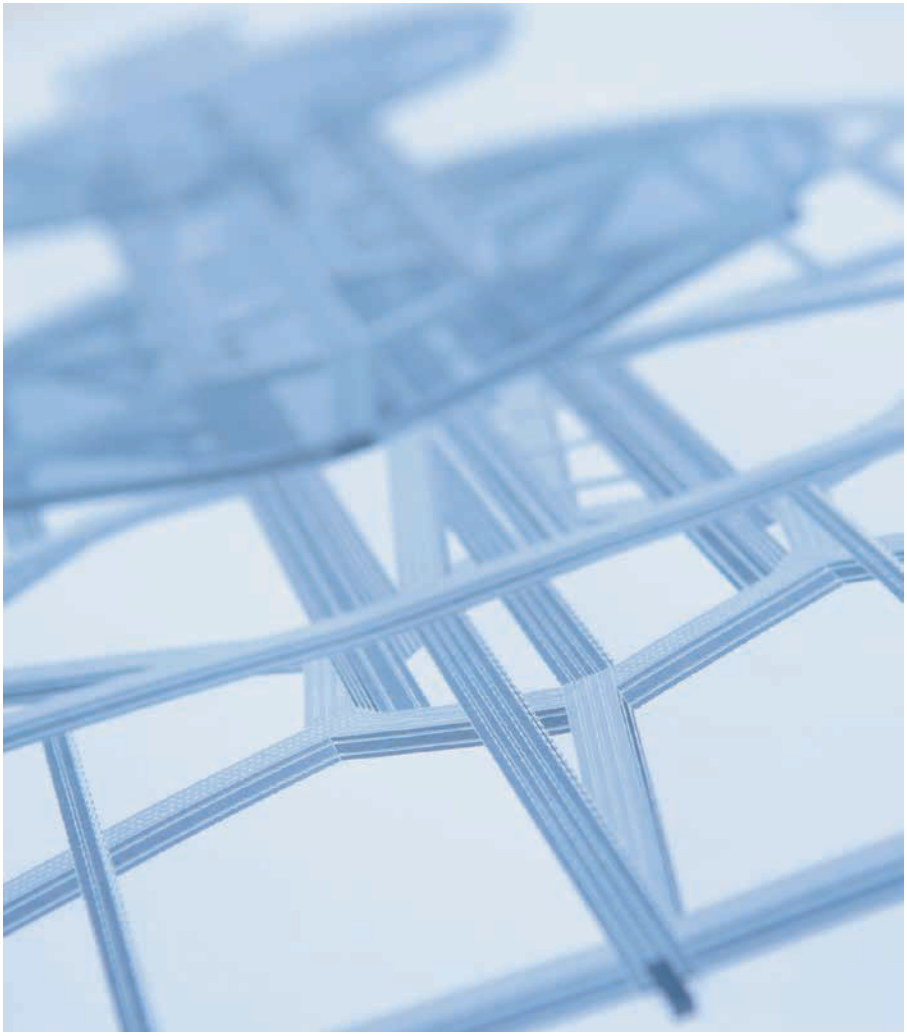

Innovation

Efficient CAD engineering by designers who prepare quotes, drawings and parts lists using the very latest technology.

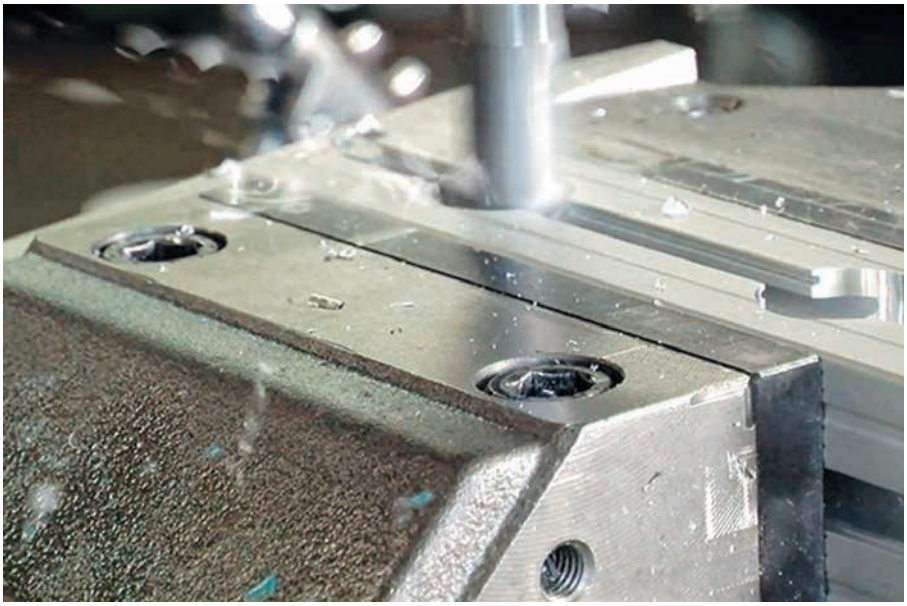

Flexibility

Production and processing conducted by trained experts to manufacture the desired product for our customers using specialist machinery, whilst guaranteeing cost-efficiency and a high level of precision.

Speed

Pre- and finished assembly by specialists who can quickly install ready-to-use system solutions, even directly onsite if you want.

Packing machine

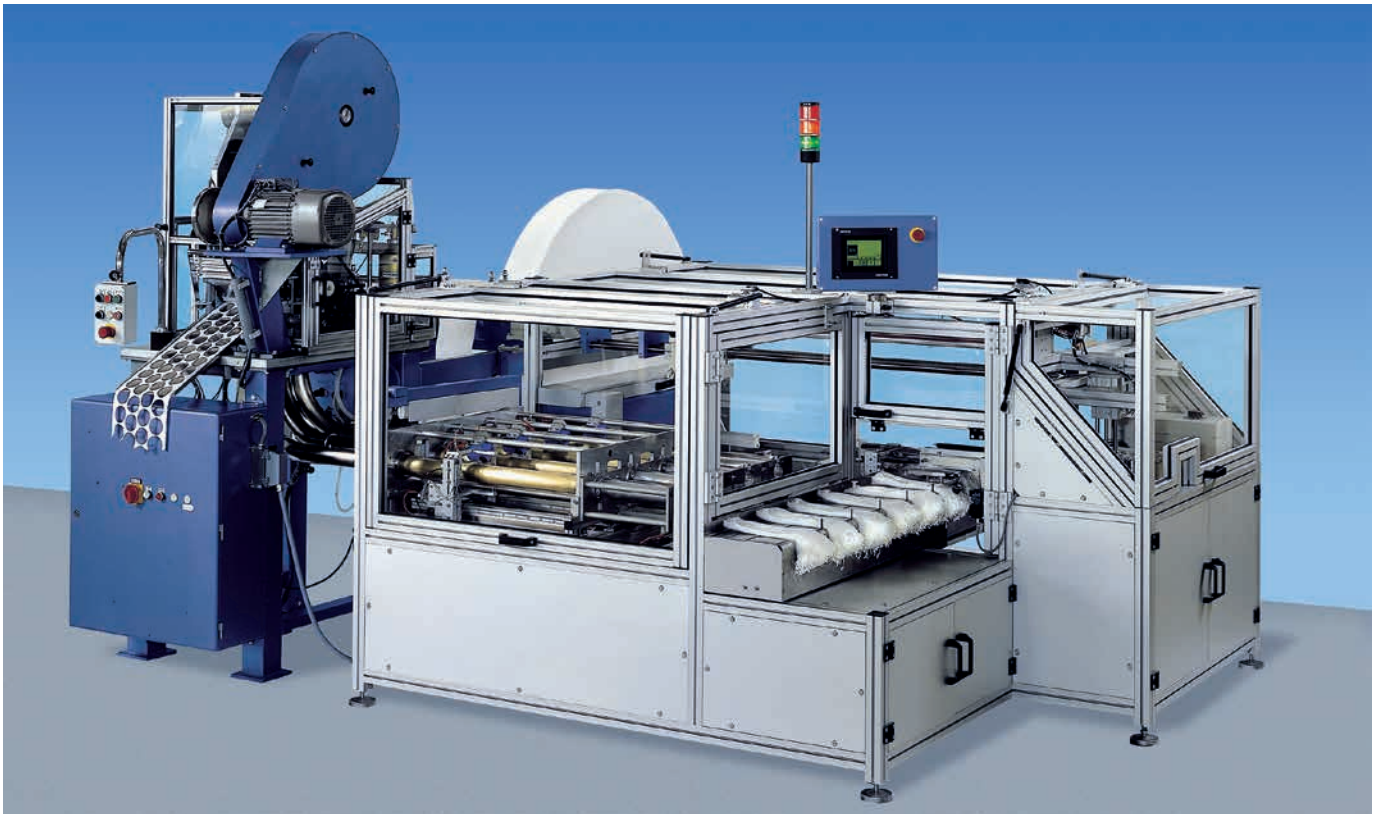

Cotton wool machine

Band rolling machine

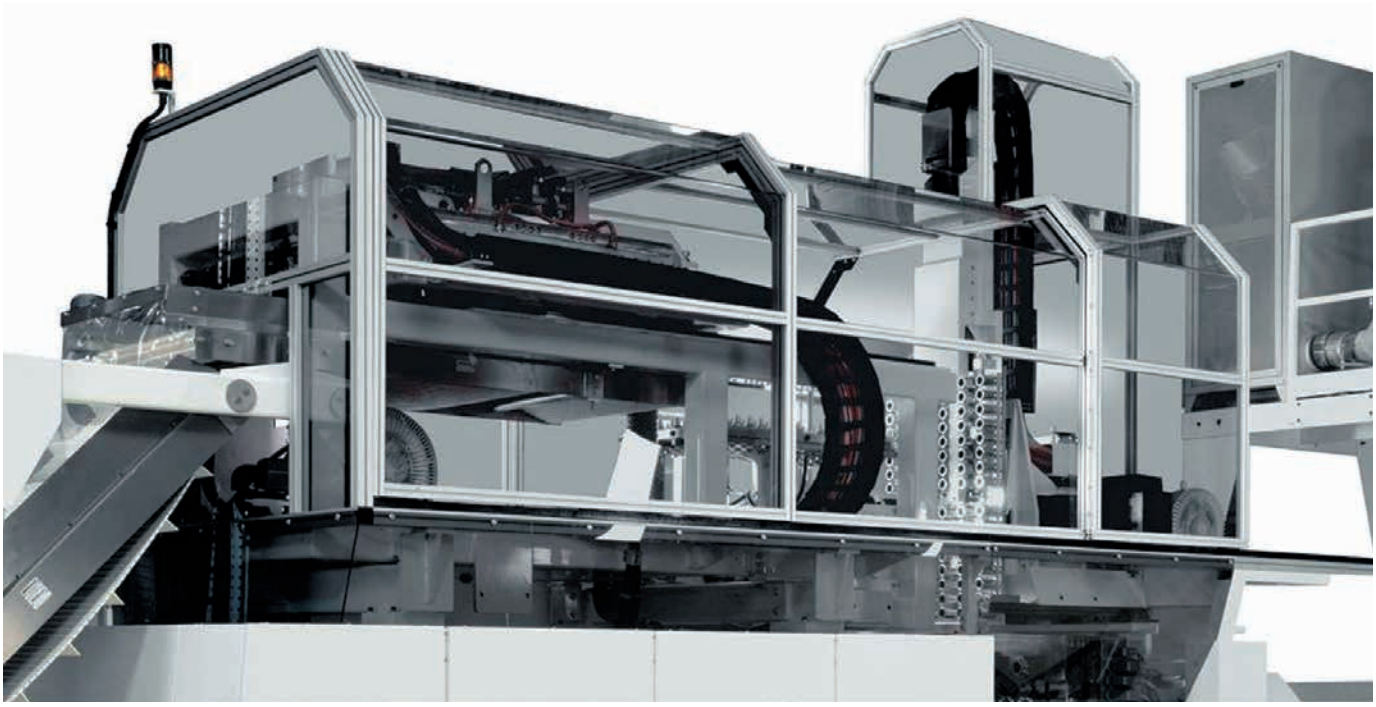

Cover for Pet machine

Base frame for mixing unit

Machine frame

Unwinding machine

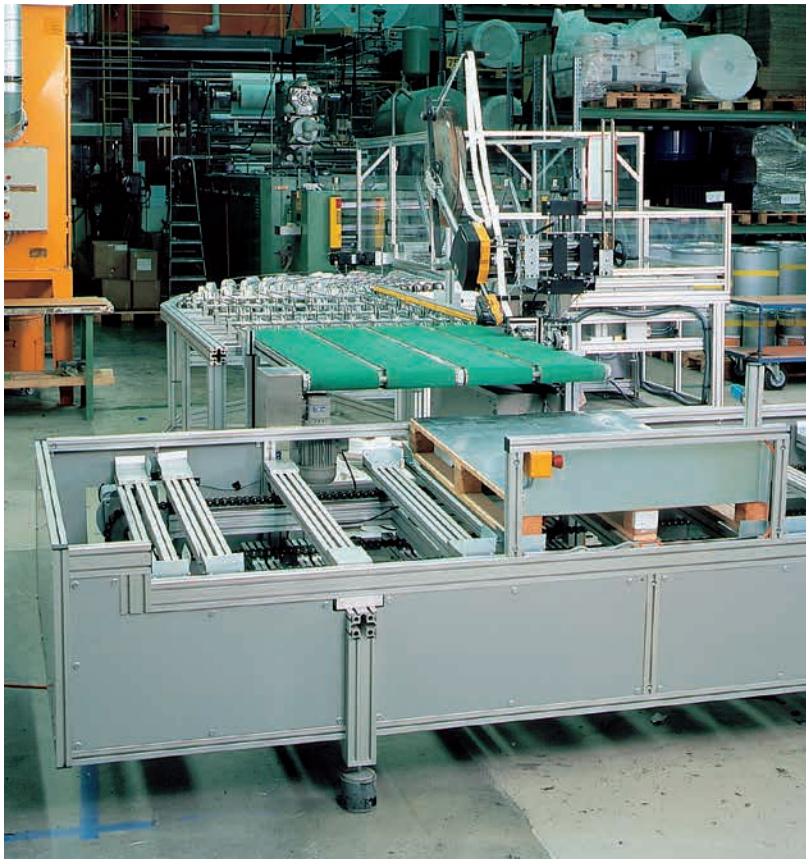

Palletising plant

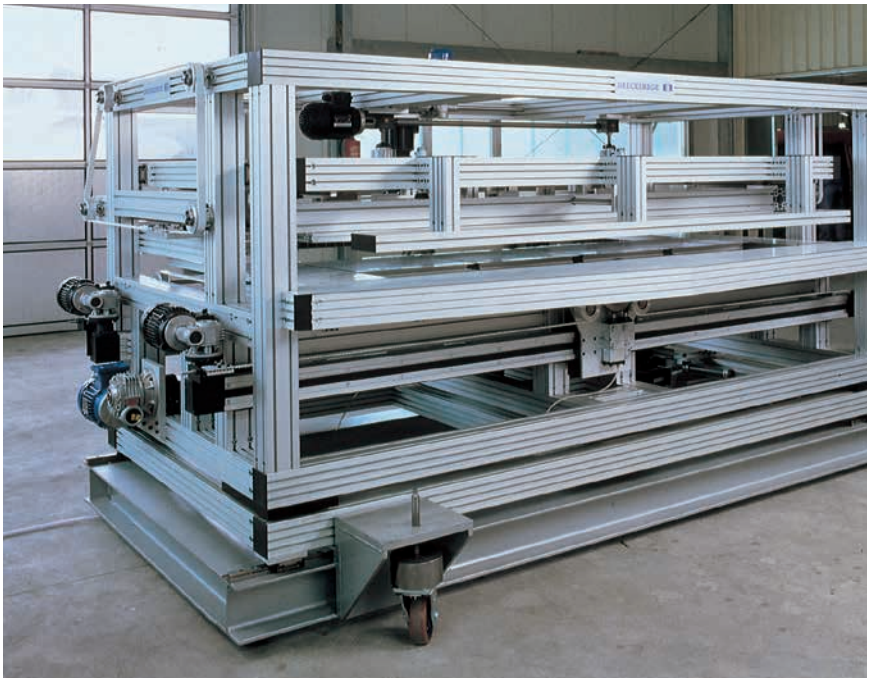

Longitudinal and transverse cutting machine

Newspaper handling system

Machine chassis

Packaging plant

Filling plant

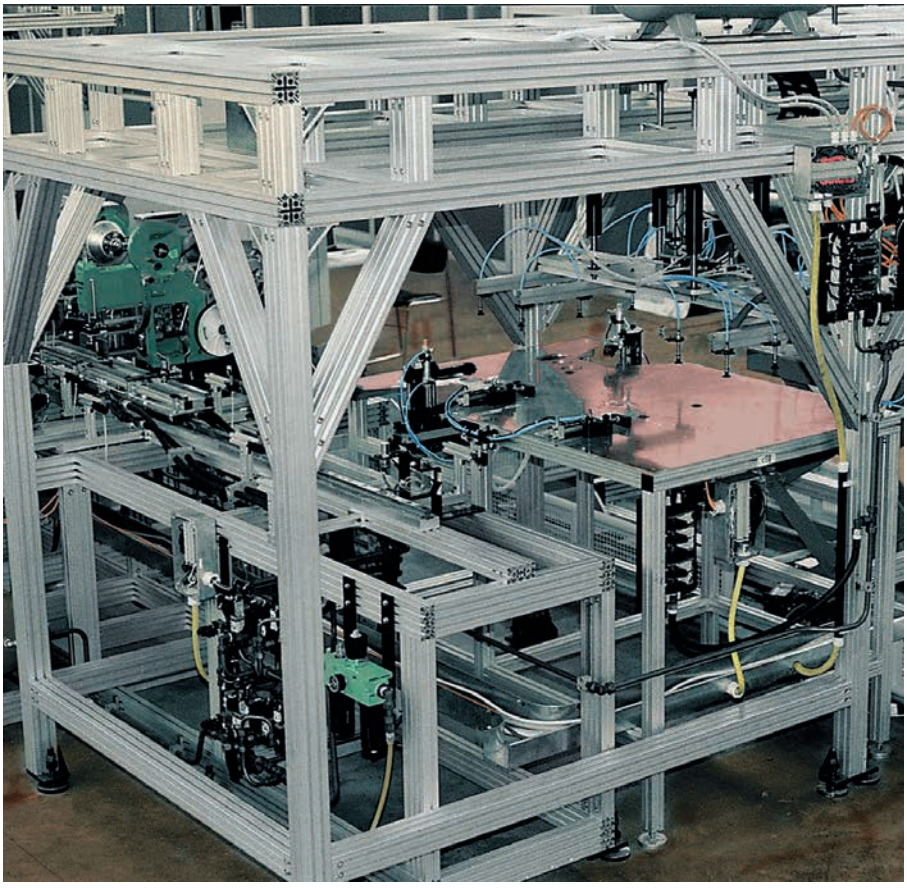

Transforming plant

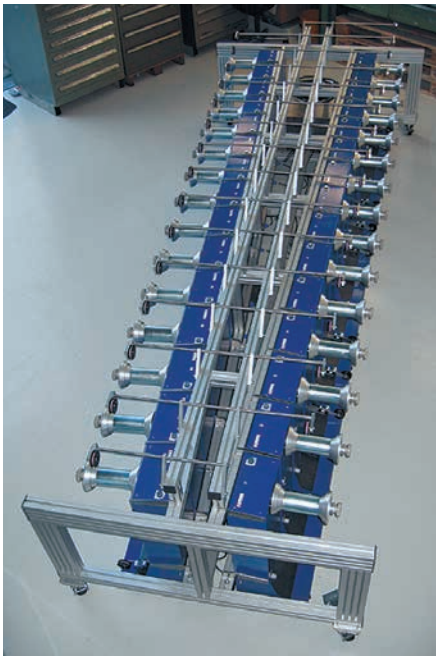

Unwinding machine

Cleaning plant

Plane wing testing machine

Filling plant

Machine case

Test plant for carbonate bicycle frames

Automatic placement machine

Automatic gilding plant

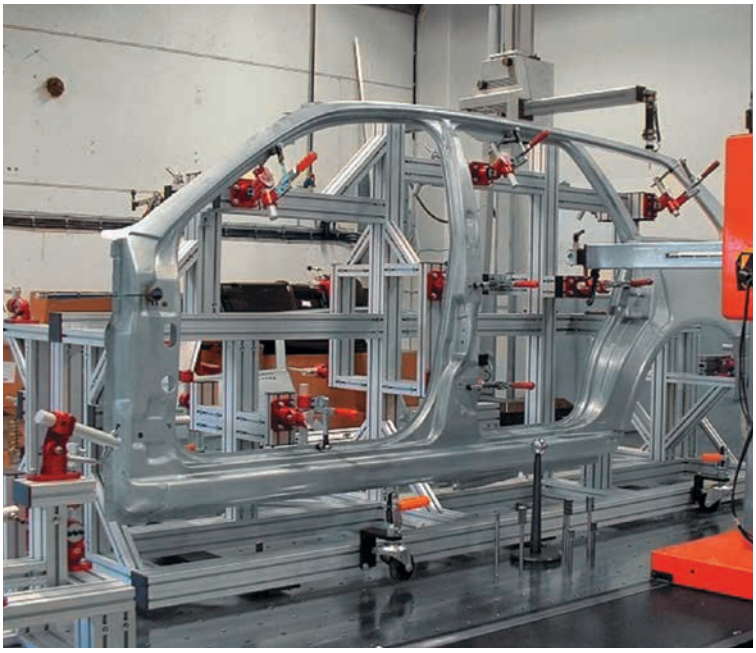

Clamping and measuring device

Feeder and transfer system

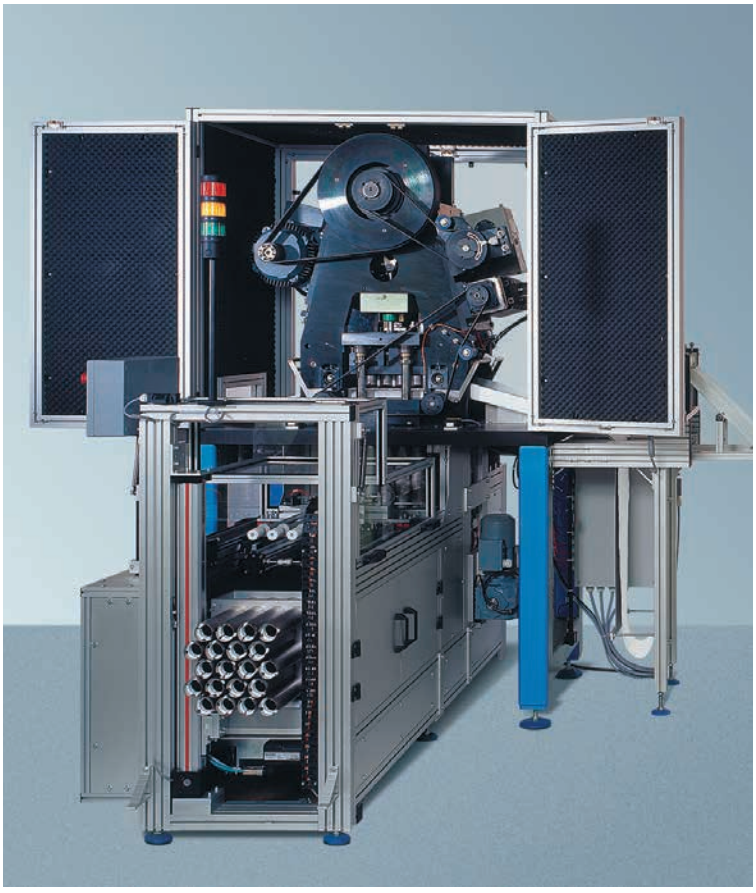

Automatic punching press with acoustic enclosure

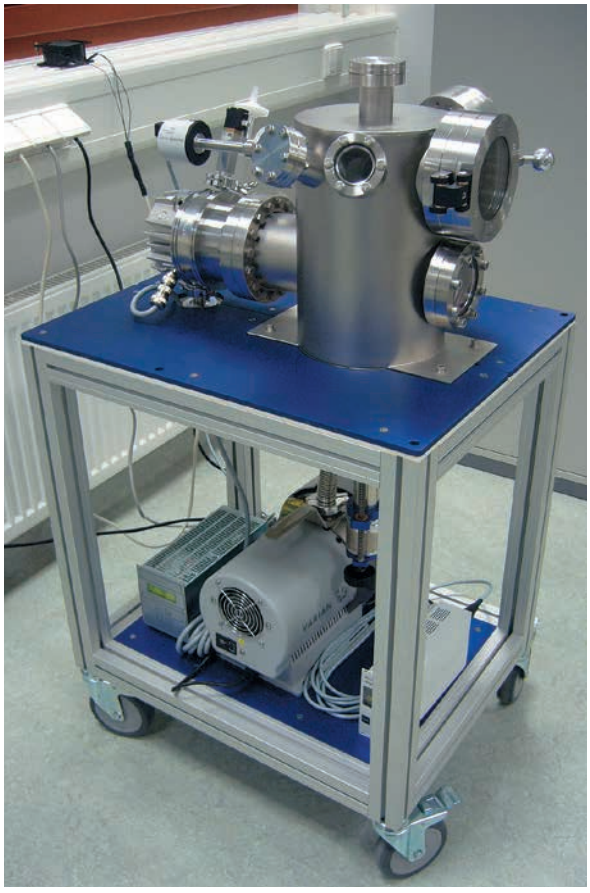

Vacuum testing facility

Swing doors

Sliding doors

Safety doors to test room

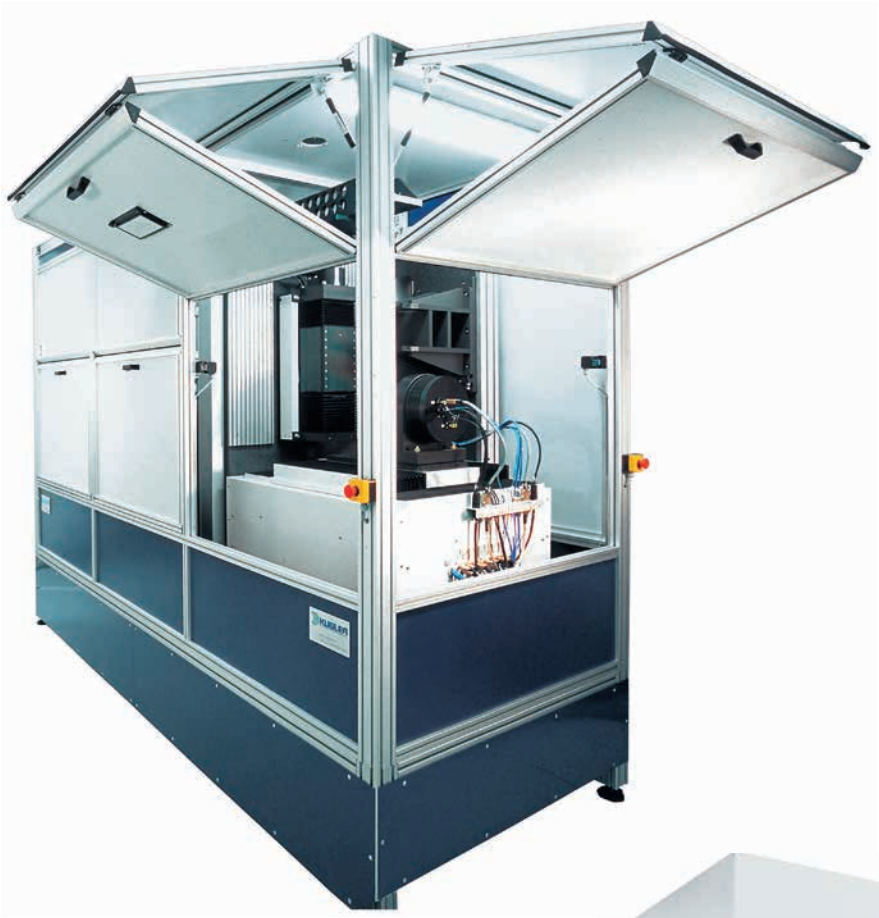

Folding door around machine

Double lift door system

Protective hood with counterweight

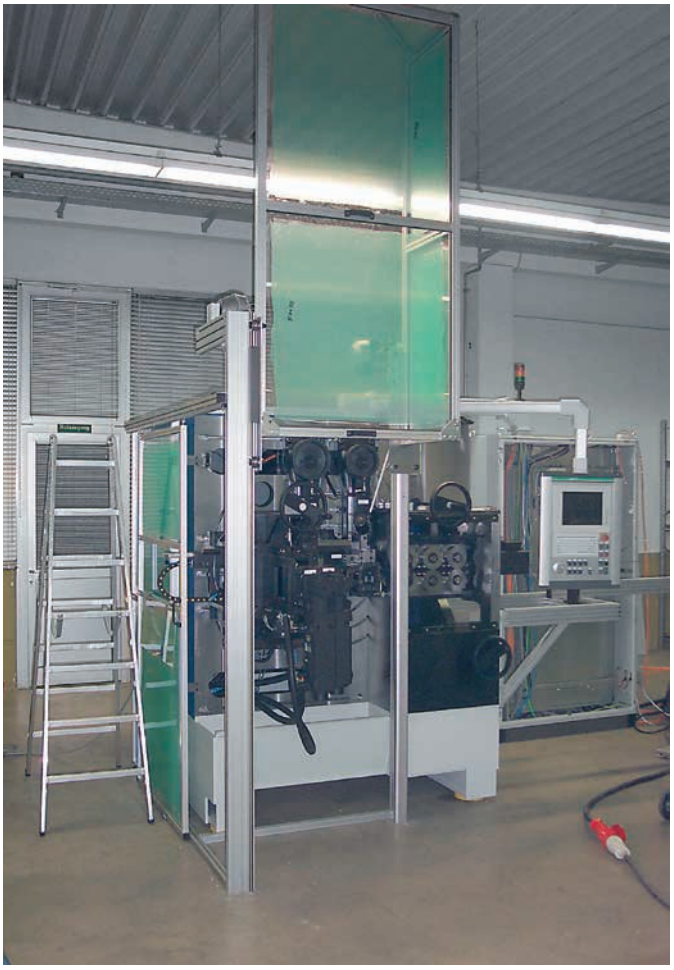

Lift doors

Pneumatic swing lift doors

Folding doors

Sliding door around machine

Protective hood

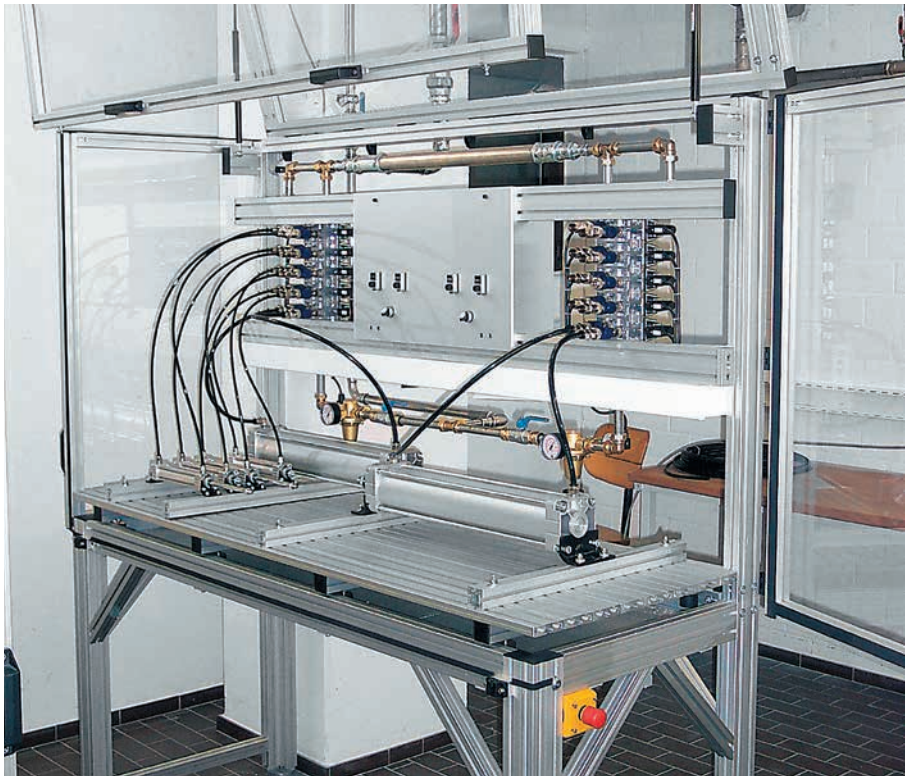

Swing door

Angled double lift door

4-section telescopic sliding door

Machine protection door solution on all four sides

Self-supporting machine protection door

Placement trolley

Assembly platform

Height-adjustable assembly workstation

Lifting table - production line

Storage and placement workstation

Assembly workstation from tube system

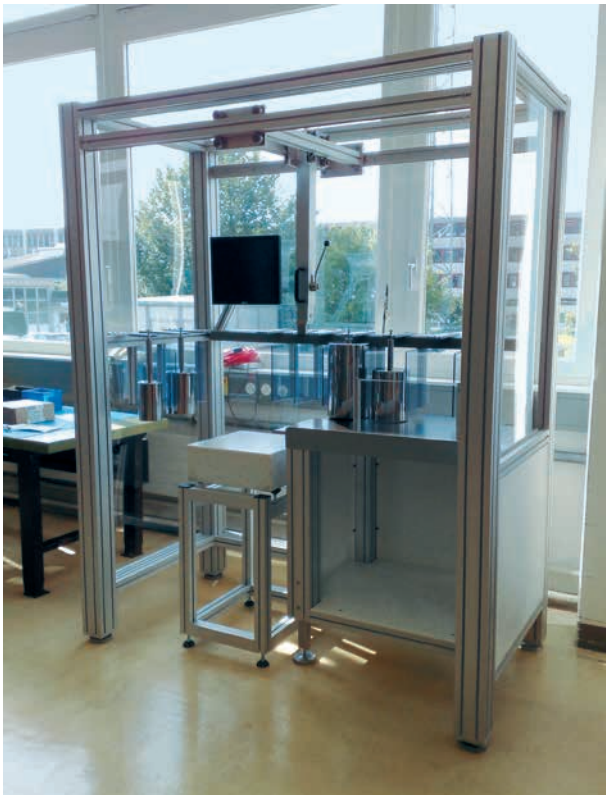

Testing and measuring workstation

Assembly workstation from extrusion and tube system

Assembly workstation

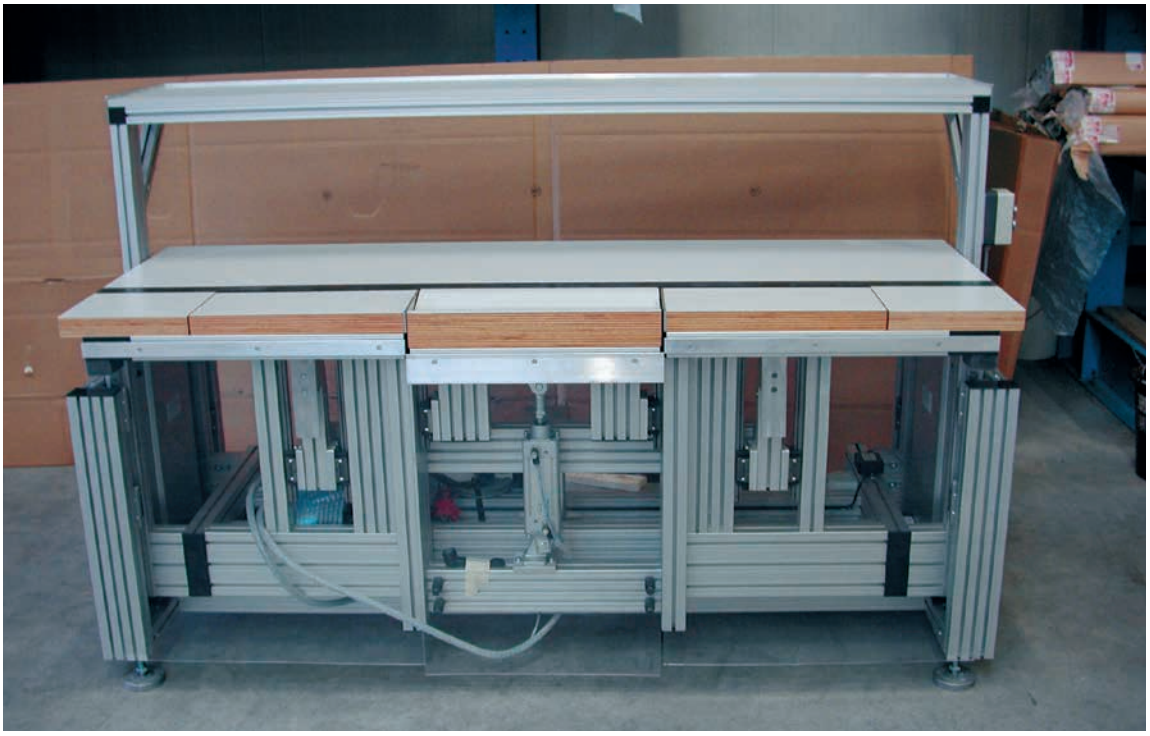

Packaging table

Assembly workstation

Workstation system

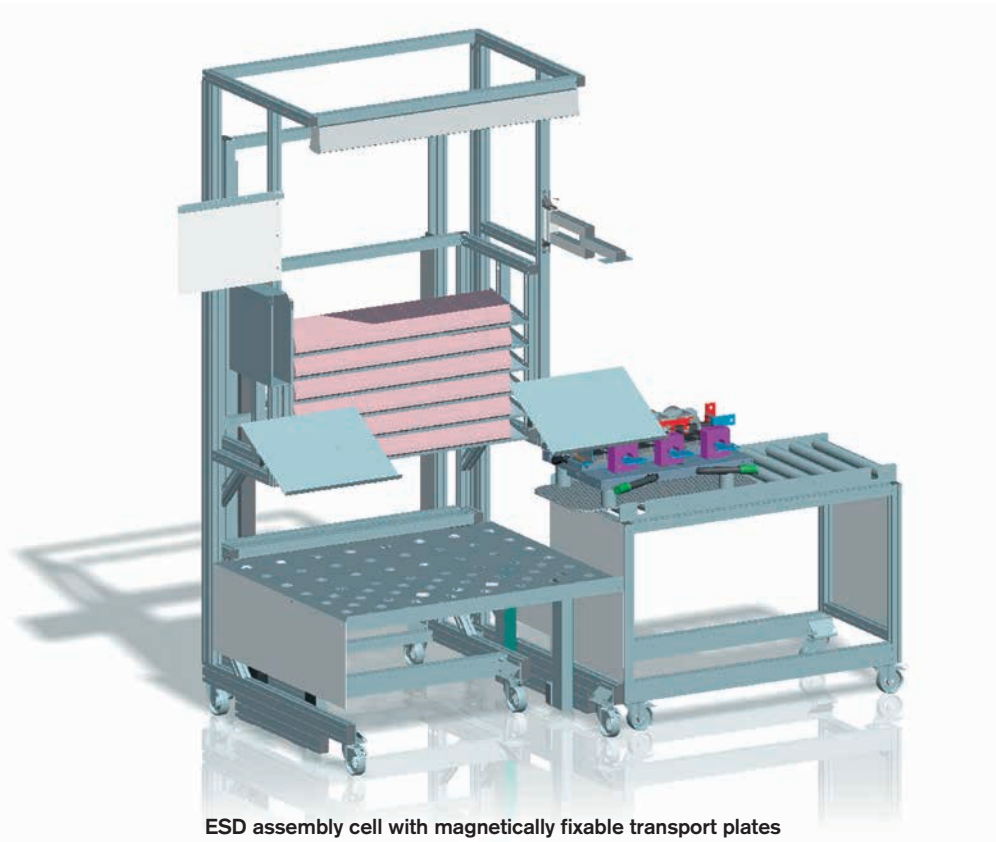

ESD assembly cell with magnetically fixable transport plates

Realisation

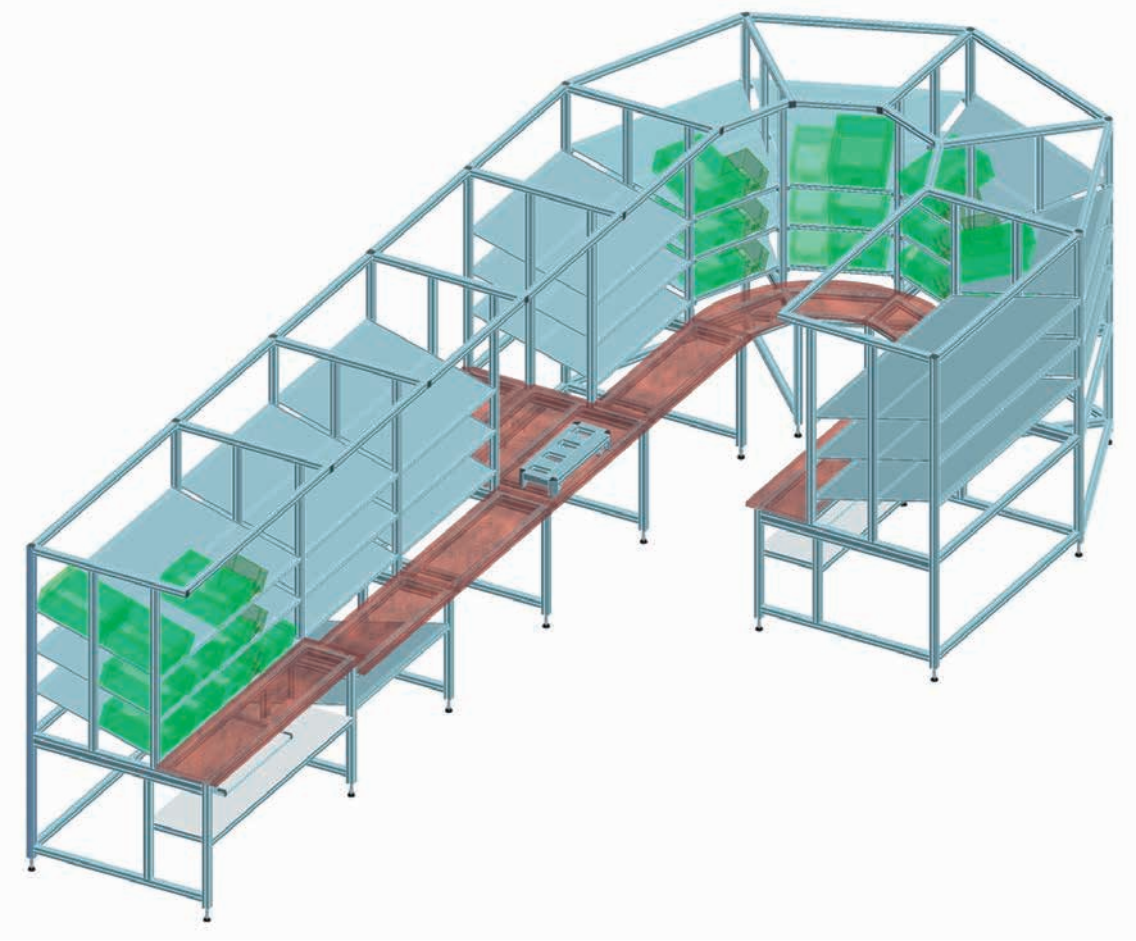

Assembly cell with rollable workpiece holders

Realisation

Mobile easel

Mobile scale

Long-item storage rack

Cleaning trolley

Dehydration vehicle

Rivet station

Lifting table as assembly aid around machine

Attachment to existing tables

Height-adjustable assembly trolley

Project trolley

Mobile computer workstation

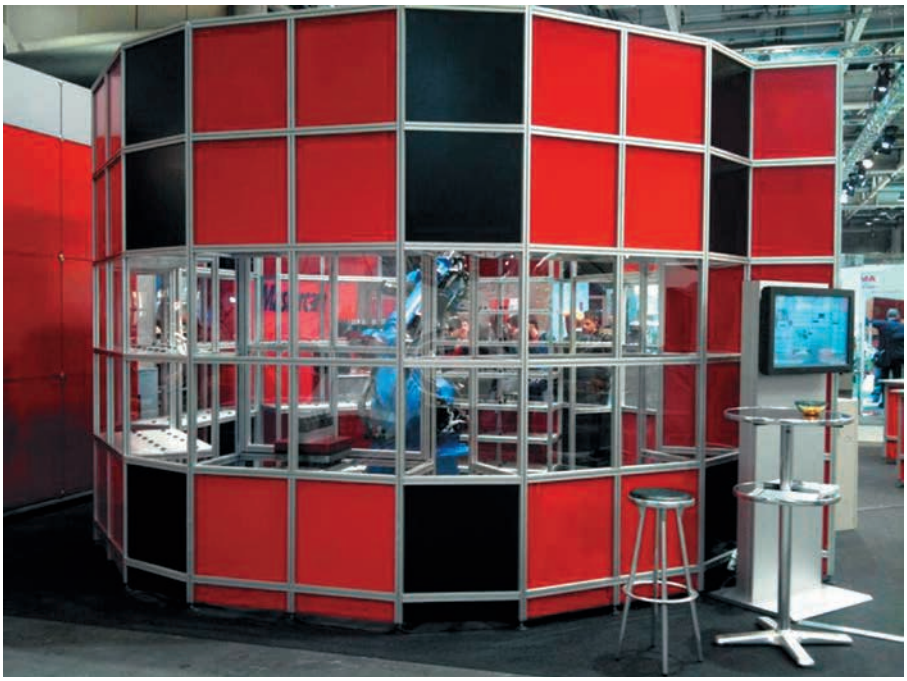

Protective cell and storage frame around robot

Safety housing

Dividing wall to manufacturing plant

Dust protection cabin

Casing for deburring facility with safety glass

Darkroom

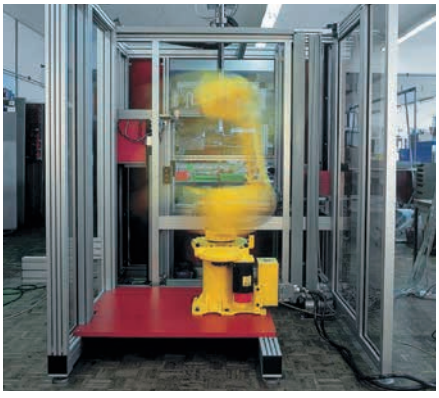

Robot cell

Safety housing

Noise protection cabin for parts cleaning plant

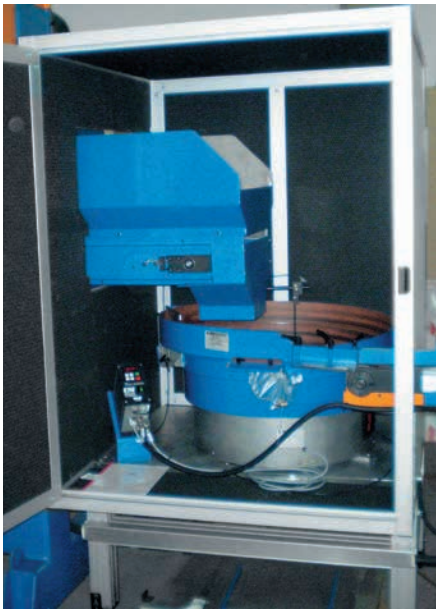

Noise protection enclosure for vibratory conveyor

Noise protection cabin with 3-fold sliding door

Noise protection enclosure for winding machine

Endurance test bench for 2-hand angle grinder with noise protection screen locks

Half-open noise protection part enclosure for heat exchanger

Noise protection enclosure for vibratory conveyor

Noise protection for hydraulic power unit

Machine casings

Safety tent space technology

Acoustic protection box for blower

Motorbike wash cubicle

Acoustic protection cabin

Acoustic protection cabin on rails, open and closed

Mobile noise protection housing with ventilation system for a vacuum pump

Workshop office

Clean room housing

Assembly office

Roller table for baby scale

Trolley for medical analyser

Double door system for dust protection

Transport trolley

Ceiling heat emitter bracket

Modular cages

Cover over a batch device for sterilisation

Special tables (here cardiology table)

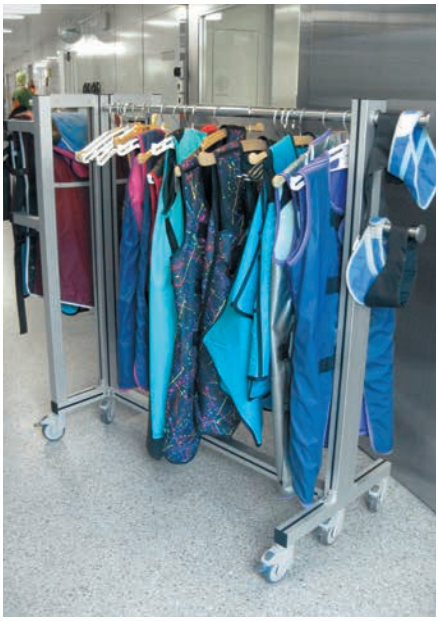

Rack for hanging up lead-weighted jackets

Modular dividing wall system

Tray trolley for sterilisation box

Transport trolley for
medical monitoring devices

Storage rack for gas-filled bottles

Oxide trolley for patient transport

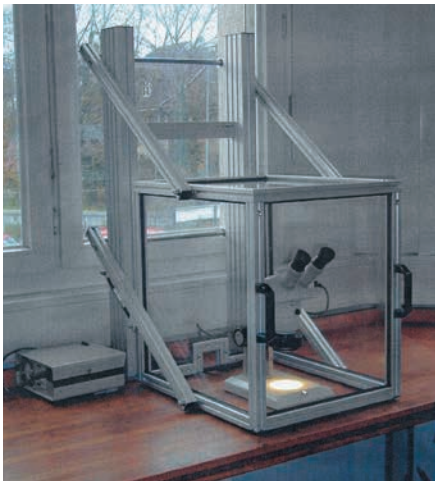

Protection cover for lab device

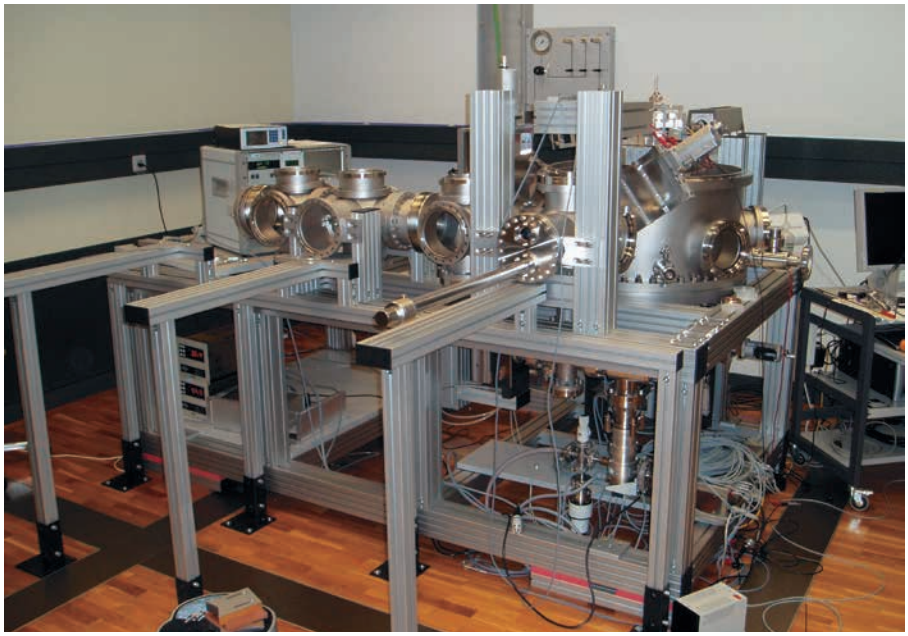

Breadboard construction (laboratory equipment)

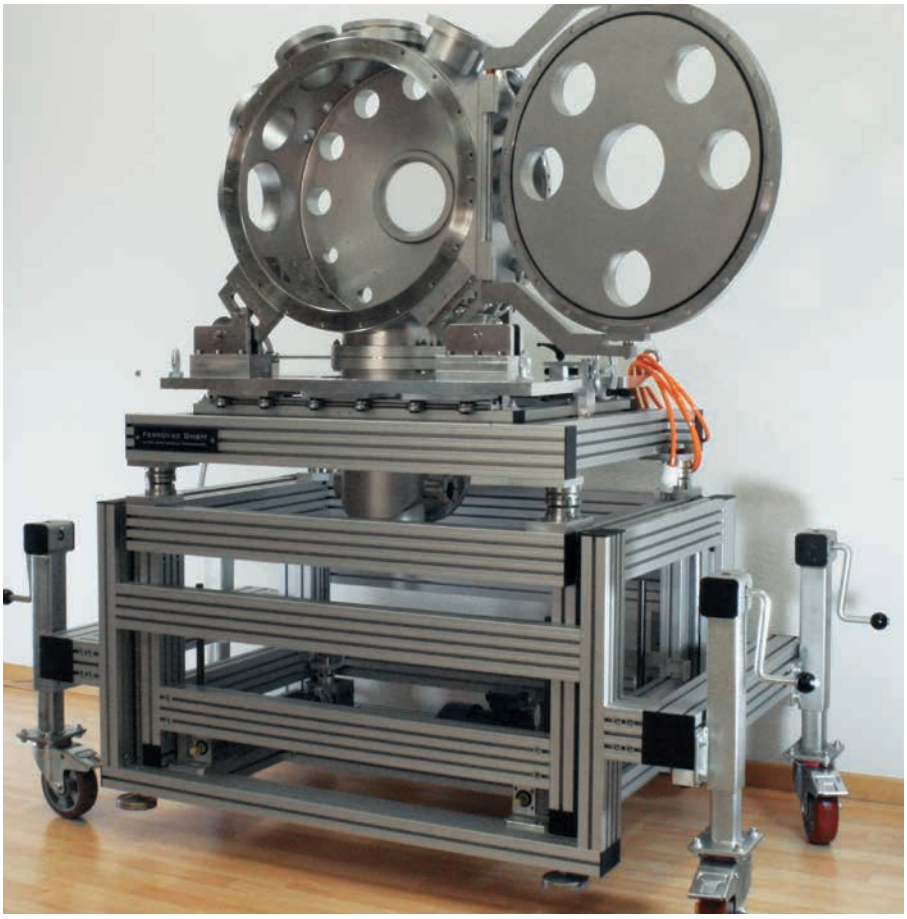

Vacuum test plant

Laboratory equipment with ceiling grid system

Platform for astronomical observatory

Solar power station

Laser research plant

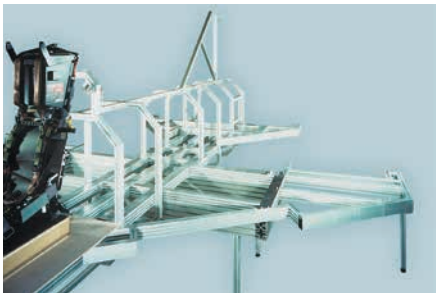

Research model fighter jet

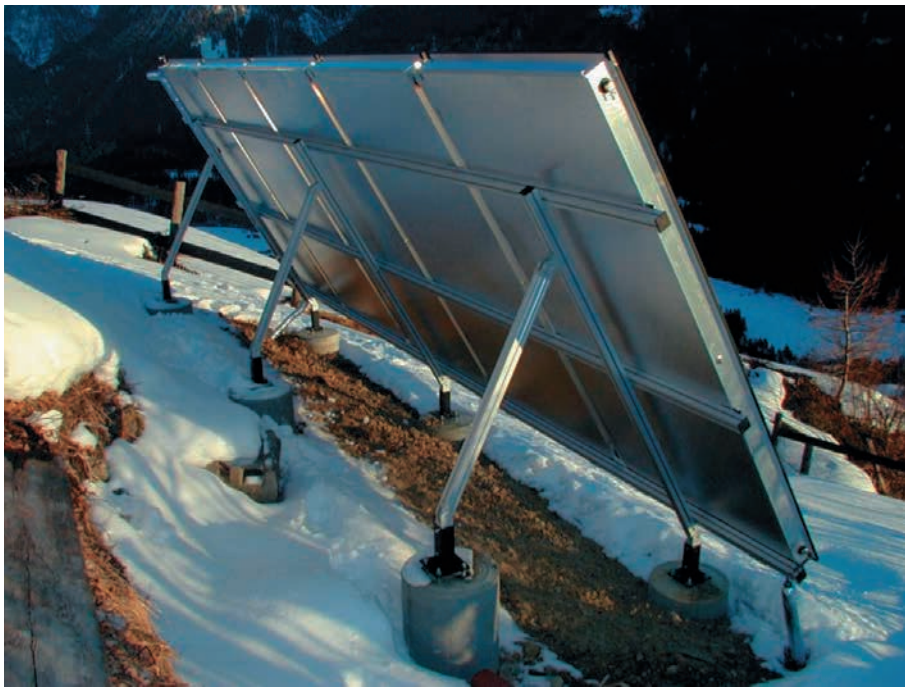

Solar plant

Material data of aluminium extrusions

Alloy	EN AW-6063			
Quality	T66			Temper-hardened (F25)
DIN designation	3.3206.72			
Tolerances	DIN EN 12020			
Density/weight	δ:		2.7 g/cm³	
Tensile strength	R_m:	min	245 N/mm²	
Yield	R_p 0.2:	min	200 N/mm²	
Elongation	A_5:	min	10%	
	A_{10}:	min	8%	
Module of elasticity	E:		70 KN/mm²	
Brinell hardness	HB		~75	
Surface	Natural matt anodised Layer thickness 12µ			Colour anodised or powder coated on request in accordance with the RAL table, raw
Thermal expansion	0.0232 mm/m/°Δt			

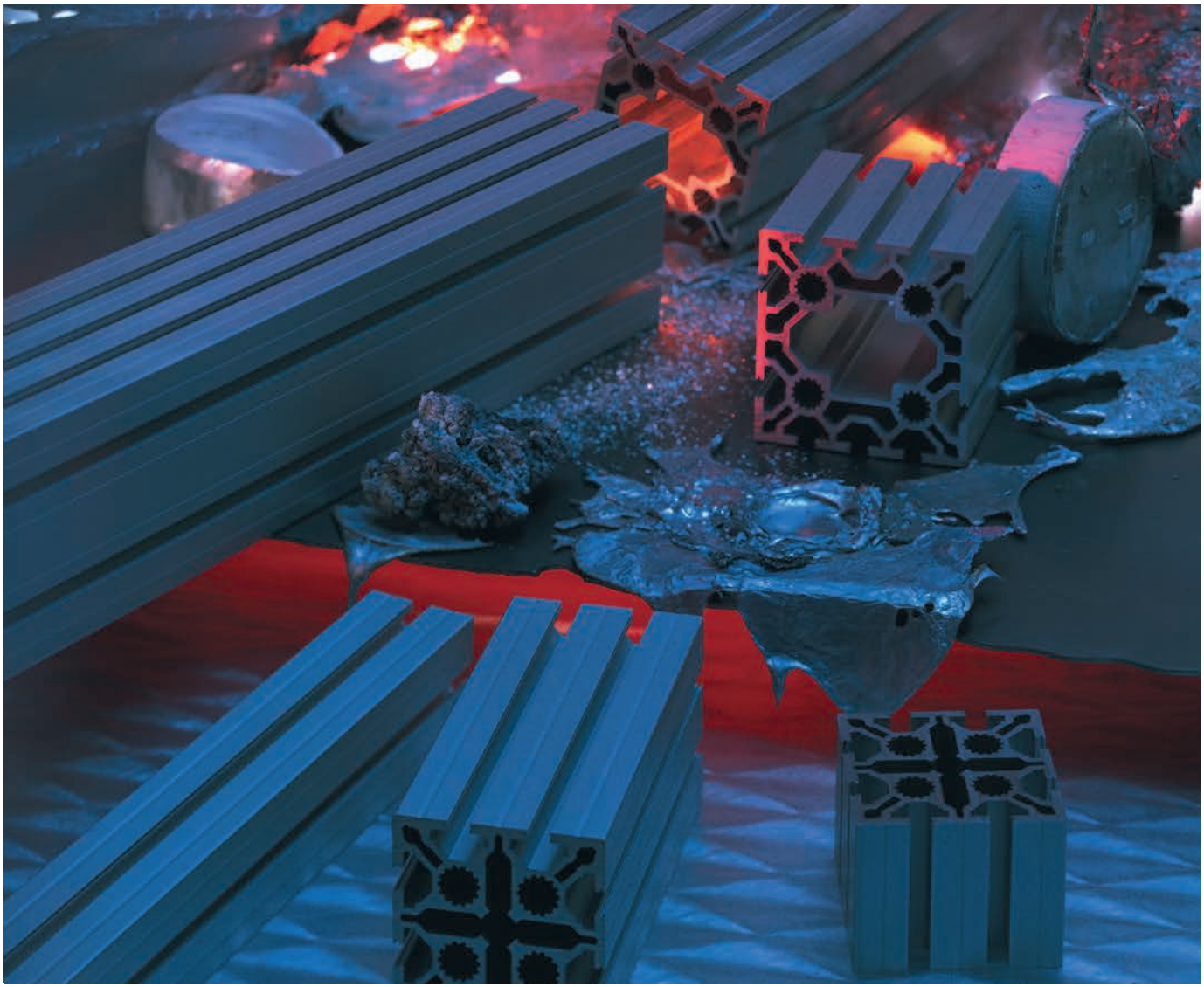

Extrusion tolerances, extract from EN 12020

1. Straightness tolerances

Cavity extrusions may not exceed the values stated in the table for the straightness tolerances h_1. The deviation h_2 may not exceed a maximum of 0.3 mm over any length of l_2 = 0.3 mm.

Length l_1 in m	up 1 m	up 2 m	up 3 m	up 4 m	up 5 m	up 6 m
Tolerance h_1 in mm	0.7	1.3	1.8	2.2	2.6	3.0

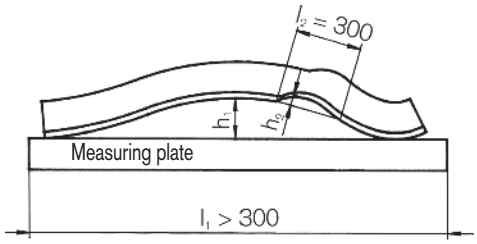

2. Twist tolerance v

The length-dependent twist tolerance v for cavity extrusions is shown in the table.

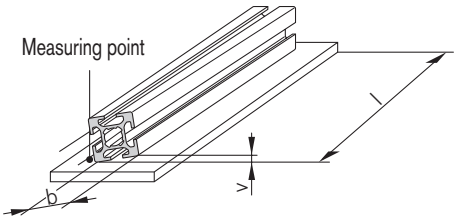

Width b in mm	Flatness tolerance v in mm for lengths in mm – 1000	> 1000–2000	– 2000–3000	> 3000–4000	> 4000–5000	> 5000–6000
– 25	1.0	1.5	1.5	2.0	2.0	2.0
> 25 – 50	1.0	1.2	1.5	1.8	2.0	2.0
> 50 – 75	1.0	1.2	1.2	1.5	2.0	2.0
> 75 – 100	1.0	1.2	1.5	2.0	2.2	2.5
> 100 – 125	1.0	1.5	1.8	2.2	2.5	3.0
> 125 – 150	1.2	1.5	1.8	2.2	2.5	3.0
> 150 – 200	1.5	1.8	2.2	2.6	3.0	3.5
> 200 – 300	1.8	2.5	3.0	3.5	4.0	4.5

3. Inclination tolerance w

Where sides are of unequal length, inclination tolerance shall be relative to the angle of the shorter side.

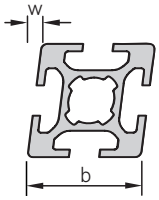

Width b in mm	Inclination tolerance w in mm	Width b in mm	Inclination tolerance w in mm
– 30	0.3	> 120 – 140	0.8
> 30 – 50	0.4	> 140 – 160	0.9
> 50 – 80	0.5	> 160 – 180	1.0
> 80 – 100	0.6	> 180 – 200	1.2
> 100 – 120	0.7	> 200 – 240	1.5

4. External tolerances

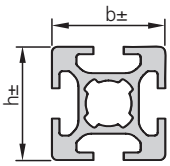

Width b, h in mm	Deviation in mm	Width b, h in mm	Deviation in mm
> 15 – 30	± 0.25	> 120 – 150	± 0.80
> 30 – 45	± 0.30	> 150 – 180	± 1.00
> 45 – 60	± 0.40	> 180 – 240	± 1.20
> 60 – 90	± 0.45	> 240 – 300	± 1.50
> 90 – 120	± 0.60		

Strength calculations

Load case 1

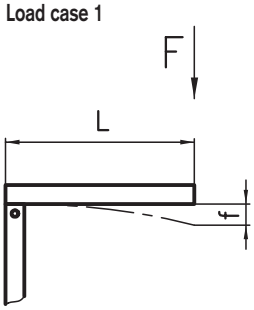

$$f\,[mm] = \frac{0.476 \times F\,[N] \times L^3\,[m]}{I\,[cm^4]}$$

Example:

A counterweight with a max. load of 500 N is to be fastened to an extruded arm 800 mm long. What will be the deflection of a 40x40 mm C01–1 type base extrusion?

$$\text{Deflection } f = \frac{0.476 \times 500 \times 0.8^3}{11.70} = 10.42 \text{ mm}$$

Where:

F = load in N
L = extrusion length in m
I = moment of inertia in cm^4
f = deflection in mm
a/b = distance to the load point in m
q = line load in N/m

Checking the bending stress:

$$\delta = \frac{M_b}{W \times 10^3}$$

δ = bending stress in N/mm^2
M_b = max. bending moment in Nmm
W = section modulus in cm^3

Load case 2

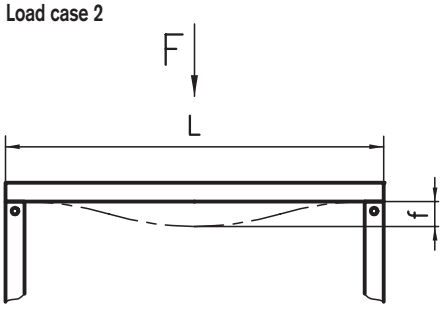

$$f\,[mm] = \frac{0.0074 \times F\,[N] \times L^3\,[m]}{I\,[cm^4]}$$

Example:

An 1800 N load is placed in the middle of a beam. The unsupported length is 1200 mm. The max. permissible deflection is 1.0 mm. What sort of extrusion should be used for the beam?

$$\text{Deflection } f = \frac{0.0074 \times F \times L^3}{I} \Rightarrow I = \frac{0.0074 \times F \times L^3}{f}$$

$$\text{Moment of inertia } I = \frac{0.0074 \times 1800 \times 1.2^3}{1.0} = 23.02 \text{ cm}^4$$

⇨ **Selection: Use a heavy duty extrusion MA1–1 where I = 29.37 cm^4**

Load case 3

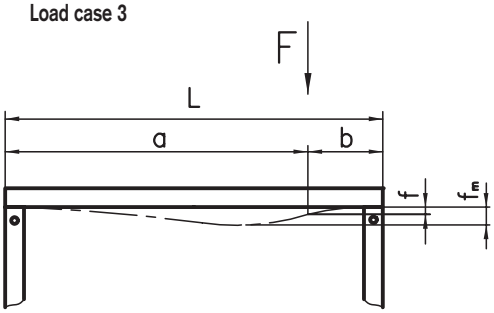

$$f\,[mm] = \frac{0.476 \times F\,[N] \times a^3\,[m] \times b^3\,[m]}{I\,[cm^4] \times L^3\,[m]}$$

a > b	$f_m\,[mm] = \frac{0.952 \times F\,[N] \times a^3\,[m] \times b^2\,[m]}{I\,[cm^4] \times L^2\,[m]} \left(\frac{L\,[m]}{L\,[m] + 2a\,[m]}\right)^2$
a < b	$f_m\,[mm] = \frac{0.952 \times F\,[N] \times a^2\,[m] \times b^3\,[m]}{I\,[cm^4] \times L^2\,[m]} \left(\frac{L\,[m]}{L\,[m] + 2b\,[m]}\right)^2$

Example:

A cross-beam measuring 2500 mm in width has to support another beam 850 mm from the end of the cross-beam. The support load is 1200 N. A 50 x 100 base extrusion is used as the cross-beam. How great is the deflection at the point where the beam is placed?

$$\text{Deflection } f = \frac{0.476 \times 1200 \times 1.65^3 \times 0.85^3}{149.84 \times 2.5^3} = 0.67 \text{ mm}$$

Where:

F = load in N
L = extrusion length in m
I = moment of inertia in cm^4
f = deflection in mm
a/b = distance to the load point in m
q = line load in N/m

Load case 4v

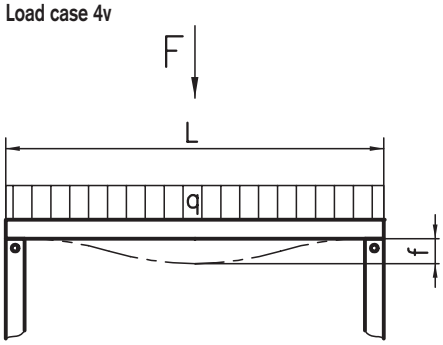

$$f\,[mm] = \frac{0.0037 \times F\,[N] \times L^3\,[m]}{I\,[cm^4]}$$

F = q x L

Beispiel:

A measuring plate (whose intrinsic stability is ignored) may not bend by more than 0.4 mm. The measuring table is 1500 mm deep and the line load on each side of the table is 8000 N/lm.
Which extrusion must be used to support the measurement plate?

F = q x L = 8000 x 1,5 = 12 000 N

$$\text{Deflection } f = \frac{0.0037 \times F \times L^3}{I} \Rightarrow I = \frac{0.0037 \times F \times L^3}{f}$$

$$\text{Moment of inertia } I = \frac{0.0037 \times 12000 \times 1.5^3}{0.4} = 374.64 \text{ cm}^4$$

⇨ **Selection: Use a heavy duty extrusion MA1-5 (100 x 100) where I = 380.00 cm^4**

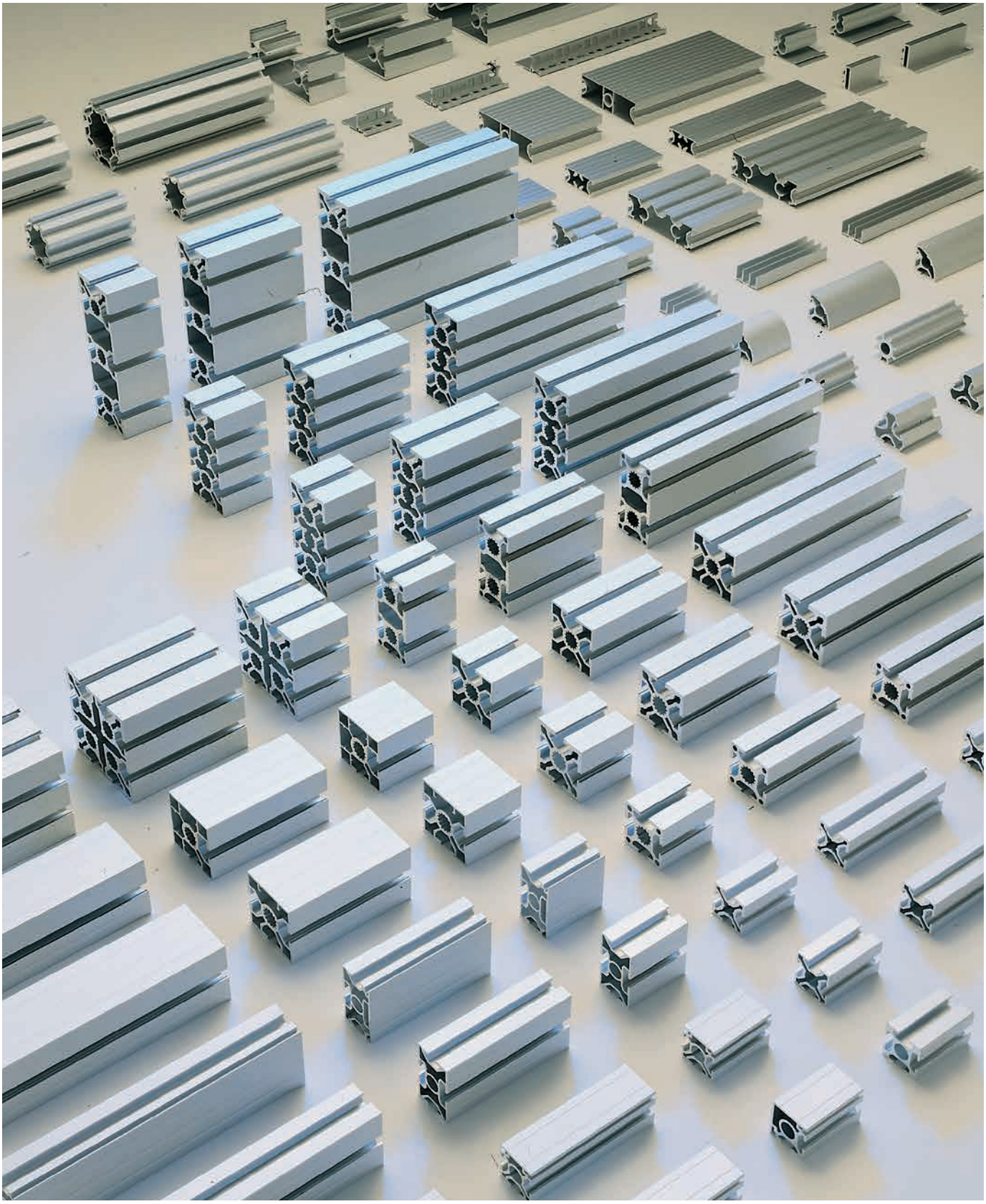

50 mm base extrusion	Type		Weight [kg/m]	Ix,y [cm4]	Wx,y [cm3]	Page
Four sided softline extrusion 50x50	Typ A10–0		2.3	20.55	8.22	62
Lightweight extrusion 50x50	Typ A02–1		1.8	16.07	6.42	63
Base extrusion 50x50	Typ A01–1		2.3	20.88	8.35	64
Heavy duty extrusion 50x50	Typ MA1–1		3.1	29.37	11.75	64
Face extrusion 50x50	Typ A01–8		2.2	20.38, 19.61	8.15, 7.55	65
Corner extrusion 50x50	Typ A01–7		2.0	17.69	7.05	65
Double face extrusion 50x50	Typ A02–4		2.0	19.59, 18.17	7.83, 7.27	66
Angle extrusion 50x45°	Typ A02–8		1.7	13.10	4.50	66
Face panel extrusion 50x50	Typ A03–8		2.2	20.40, 19.72	8.07, 7.89	67
Base extrusion 50x100	Typ A01–2		4.6	149.84, 41.25	29.97, 16.50	68
Heavy duty extrusion 50x100	Typ MA1–2		5.3	198.66, 50.28	39.73, 20.11	69
Face extrusion 50x100	Typ MA1–4		5.2	203.67, 54.31	40.73, 21.03	70
Base extrusion 100x100	Typ MA2–5		8.1	324.73	64.95	71
Heavy duty extrusion 100x100	Typ MA1–5		9.5	380.00, 365.00	76.00, 73.00	72
Corner extrusion 100x100	Typ A03–7		7.1	314.10	62.82	73
Beam extrusion 50x150	Typ MA1–3		7.1	608.31, 73.56	81.11, 29.42	74

50 mm base extrusion	Type		Weight [kg/m]	Ix,y [cm4]	Wx,y [cm3]	Page
Beam extrusion 50x200	Typ MA1–6		8.8	1315.83, 92.71	131.58, 37.08	75
Heavy duty extrusion 100x200	Typ MA1–9		17.0	2442.53, 718.61	244.25, 143.72	76

45 mm base extrusion	Type		Weight [kg/m]	Ix,y [cm4]	Wx,y [cm3]	Page
Four sided softline extrusion 45x45	Typ E10–1		2.07	14.07	6.25	77
Light extrusion 45x45	Typ E02–1		1.72	13.16	5.85	77
Base extrusion 45x45	Typ E01–1		2.07	16.12	7.16	78
Face extrusion 45x45	Typ E02–6		1.59	11.76, 12.20	5.13, 5.42	78
Corner extrusion 45x45	Typ E02–7		1.52	11.75, 11.83	5.12, 5.16	79
Double face extrusion 45x45	Typ E02–4		1.56	11.4612.33	5.09, 5.48	79
Softline extrusion 45x45	Typ E03–1		1.45	9.70	3.80	80
Light extrusion 45x90	Typ E02–3		2.84	90.44, 23.62	20.10, 10.50	81
Base extrusion 45x90	Typ E01–3		3.50	109.54, 29.77	24.34, 13.23	82
Face extrusion 45x90	Typ E01–14		3.50	109.45, 30.23	24.32, 13.38	83
Corner extrusion 45x90	Typ E02–2		2.65	82.76, 22.31	18.26, 9.79	84

45 mm base extrusion	Type		Weight [kg/m]	Ix,y [cm4]	Wx,y [cm3]	Page
Beam extrusion 45x135	Typ E01–19		4.93	334.22, 43.41	49.51, 19.30	85
Beam extrusion 45x180	Typ E01–16		6.36	743.74, 57.06	82.64, 25.36	86
Light extrusion 90x90	Typ E02–5		4.73	160.09	35.58	87
Base extrusion 90x90	Typ E01–4		6.08	205.78	45.73	88
Beam extrusion 90x135	Typ E01–13	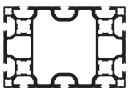	8.10	618.00, 300.57	98.56, 66.79	89
Beam extrusion 90x180	Typ E01–5		10.88	1303.61, 417.14	144.85, 92.69	90

40 mm base extrusion	Type		Weight [kg/m]	Ix,y [cm4]	Wx,y [cm3]	Page
Four sided softline extrusion 40x40	Typ C10–0		1.6	9.6	4.57	91
Four sided softline extrusion 40x80	Typ C10–3		2.8	69.73, 18.52	17.43, 9.26	91
Four sided softline extrusion 80x80	Typ C10–4		4.4	119.40	29.85	92
Super lightweight extrusion 40x40	Typ C03–1		1.3	8.20	4.10	93
Lightweight extrusion 40x40	Typ C02–1		1.5	9.35	4.67	93
Base extrusion 40x40	Typ C01–1		2.0	11.70	5.75	94
Face extrusion 40x40	Typ C01–8		2.0	11.66, 11.67	5.78, 5.83	94

40 mm base extrusion	Type		Weight [kg/m]	Ix,y [cm4]	Wx,y [cm3]	Page
Corner extrusion 40x40	Typ C01–7		1.5	9.21	4.53	95
Double face extrusion 40x40	Typ C02–4		1.5	9.56, 9.21	4.78, 4.60	95
Face panel extrusion 40x40	Typ C02–2		1.6	9.78, 8.77	4.59, 4.39	96
Corner panel extrusion 40x40	Typ C02–7		1.6	9.25	4.58	96
Angle extrusion 45°	Typ C04–4		1.5	8.46, 9.11	3.01, 3.44	97
Angle extrusion 40x45°	Typ C02–8		1.2	6.30	2.70	97
Softline extrusion 40x40	Typ C03–8		1.3	6.70	2.97	98
Light extrusion 40x80	Typ C02–3		2.8	64.90, 17.70	16.23, 8.85	99
Base extrusion 40x80	Typ C01–3		3.7	81.95, 22.74	20.49, 11.37	99
Face extrusion 40x80	Typ C01–5		2.6	64.40, 17.20	16.10, 8.60	100
Light extrusion 40x120	Typ C03–9		3.99	203.49, 25.75	33.91, 12.87	100
Beam extrusion 40x120	Typ C01–9		5.3	258.52, 33.43	43.09, 16.72	101
Beam extrusion 40x160	Typ C02–9		7.0	592.79, 44.36	74.09, 22.18	102
L-shaped extrusion 80x80x40	Typ C01–6		5.3	109.18	23.56	103
Corner extrusion 80x80x40 round	Typ C03–6		3.6	76.40	19.10	104
Base extrusion 80x80	Typ C01–4		6.0	154.70	38.68	105

40 mm base extrusion	Type		Weight [kg/m]	Ix,y [cm4]	Wx,y [cm3]	Page
Lightweight extrusion 80x80	Typ C03–4		4.4	115.66	28.92	105
Corner extrusion 80x80	Typ C03–7		4.5	117.70	29.43	106
Beam extrusion 80x120	Typ MC1–2		8.40	451.20, 219.76	75.20, 54.94	107
Heavy duty extrusion 80x160	Typ MC1–9		11.0	1018.98, 296.53	112.37, 74.13	108

30 mm base extrusion	Type		Weight [kg/m]	Ix,y [cm4]	Wx,y [cm3]	Page
Four sided softline extrusion 30x30	Typ B10–0		0.96	3.3	2.2	109
Super lightweight extrusion 30x30	Typ B03–1		0.7	2.63	1.76	109
Lightweight extrusion 30x30	Typ B02–1		0.9	2.95	1.97	110
Heavy duty extrusion 30x30	Typ MB1–1		1.1	3.82	2.54	110
Face extrusion 30x30	Typ B03–2		0.8	2.85, 2.83	1.90, 1.83	111
Face extrusion with panel slots 30x30	Typ B02–2		0.9	2.93, 2.76	1.93, 1.84	111
Corner extrusion 30x30	Typ B02–3		0.8	2.70	1.75	112
Corner panel extrusion 30x30	Typ B01–3		0.8	2.70	1.75	112
Double face extrusion 30x30	Typ B02–4		0.8	2.73, 2.74	1.82, 1.83	113

30 mm base extrusion	Type		Weight [kg/m]	Ix,y [cm4]	Wx,y [cm3]	Page
Softline extrusion 30x30	Typ B01–8		0.8	2.57	2.02	113
Angle extrusion 30°	Typ B04–3		0.9	3.23, 2.89	1.54, 1.48	114
Angle extrusion 45°	Typ B04–4		0.9	3.14, 2.91	1.44, 1.45	114
Angle extrusion 60°	Typ B04–6		0.9	3.07, 2.94	1.45, 1.51	115
Base extrusion 30x50	Typ B01–9		1.2	10.94, 4.33	4.38, 2.90	116
Face extrusion 30x50	Typ MB2–9		1.3	11.30, 4.55	4.52, 3.03	116
Face extrusion with panel slots 30x50	Typ MB1–9		1.3	11.25, 4.84	4.50, 3.23	117
Face extrusion with panel slots 30x60	Typ B03–6		1.5	19.33, 5.43	6.44, 3.60	117
Base extrusion 30x60	Typ B01–6		1.5	20.52, 5.20	6.84, 3.47	118
Base extrusion 60x60	Typ B02–6		2.4	35.83	11.94	118
Base extrusion 30x100	Typ MB1–2		2.3	80.77, 8.95	16.15, 5.97	119
Face extrusion with panel slots 30x100	Typ B01–2		2.1	77.86, 8.79	15.57, 5.72	119
Face extrusion 30x300	Typ B03–3	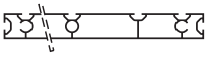	5.10	1755.64, 26.06	117.04, 17.30	120

20 mm base extrusion	Type		Weight [kg/m]	Ix,y [cm4]	Wx,y [cm3]	Page
Base extrusion 20x20	Typ D01–5		0.38	0.60	0.60	121
Corner extrusion 20x20	Typ D01–3		0.42	0.65	0.65	121
Face extrusion 20x20	Typ D01–8		0.39	0.68, 0.59	0.68, 0.59	121
Softline extrusion 20x20	Typ D03–8		0.35	0.47	0.47	122
Base extrusion 20x40	Typ D01–7		0.73	3.91, 1.10	1.95, 1.10	122
Face extrusion 20x40	Typ D02–8		0.75	4.15, 1.26	2.07, 1.18	122
Face extrusion 20x50	Typ D02–5		0.88	7.71, 1.58	3.08, 1.58	123
Face extrusion 20x100	Typ D02–1		1.55	55.5, 3.01	11.1, 3.01	123

Special extrusions	Type		Weight [kg/m]	Ix,y [cm4]	Wx,y [cm3]	Page
Wall rail 50x18	Typ A19–9		0.9	–	–	125
Slot extrusion 16x40	Typ C08–1		1.0	–	–	125
Slot extrusion 20x80	Typ C08–2		2.4	54.49, 3.97	13.62, 3.97	126
Slot extrusion 20x120	Typ C08–3		4.42	177.95, 6.31	29.66, 6.31	126
Triple channel extrusion 30x15	Typ B05–1		0.32	–	–	127

Special extrusions	Type		Weight [kg/m]	Ix,y [cm4]	Wx,y [cm3]	Page
Hand rail extrusion 50x50	Typ A19–1		1.65	13.00, 15.00	5.20, 6.00	127
19“ auxiliary extrusion	Typ A05–2		0.5	–	–	128
19“ auxiliary extrusion	Typ B05–2		0.4	–	–	128
Box frame extrusion 30x95	Typ B01–7		1.8	55.99, 7.94	11.79, 5.29	129
Runner extrusion 30x50	Typ B10–9		1.1	9.17, 4.51	3.37, 2.98	129
Box frame extrusion 20x40	Typ D01–6		0.7	2.60, 1.38	1.21, 1.38	130
30 mm base octagonal extrusion	Typ B15–3		2.8	51.01	14.09	130
Clamping extrusion 16x29	Typ A05–6		0.32	–	–	131
Double clamping extrusion 16x50	Typ A05–7		0.46	–	–	131
Panel clamp extrusions 13.5x50	Typ A05–8		0.34	–	–	131
Panel clamp extrusions 13.6x40	Typ C05–8		0.34	–	–	131
U-clamping extrusion 8x13.5	Typ B19–6		0.14	–	–	132
Support extrusion 11x30.5	Typ B19–7		0.44	–	–	132
Aluminium guide extrusion 12x11	Typ B19–8		0.15	–	–	132
Angle extrusion 38x38	Typ A30–0		1.49	–	–	133
Angle extrusion 31x31	Typ C30–0		0.94	–	–	133

Special extrusions	Type		Weight [kg/m]	Ix,y [cm4]	Wx,y [cm3]	Page
Angle extrusion 25x35	Typ A30–5		0.74	–	–	133
Angle extrusion 60x120	Typ A47–0		4.63	–	–	133
Angle extrusion 100x100	Typ A30–3		6.38	–	–	134
Angle extrusion 70x70	Typ C30–3		2.49	–	–	134
Angle extrusion 60x60	Typ A30–2		2.75	–	–	134
Angle extrusion 85x85	Typ E30–3		3.70			135
Hinge extrusion 54x17	Typ A60–6		1.33	–	–	136
Hinge extrusion 44x17	Typ C60–6		1.11	–	–	136
Hinge extrusion 36.5x20	Typ A60–5		1.19	–	–	136
Handle strip extrusion 30x35	Typ B65–5		0.59	–	–	136
Base 50 block extrusion	Typ A34–0		1.58	–	–	137
Base 40 block extrusion	Typ C34–0		1.31	–	–	137
Base 30 block extrusion	Typ B34–0		0.51	–	–	137
Rectangular tube 55x55	Typ A19–5		1.25	21.85	7.85	138
Counterweight extrusion 50x100	Typ A19–2		3.33	41.81, 16.43	8.36, 6.57	139

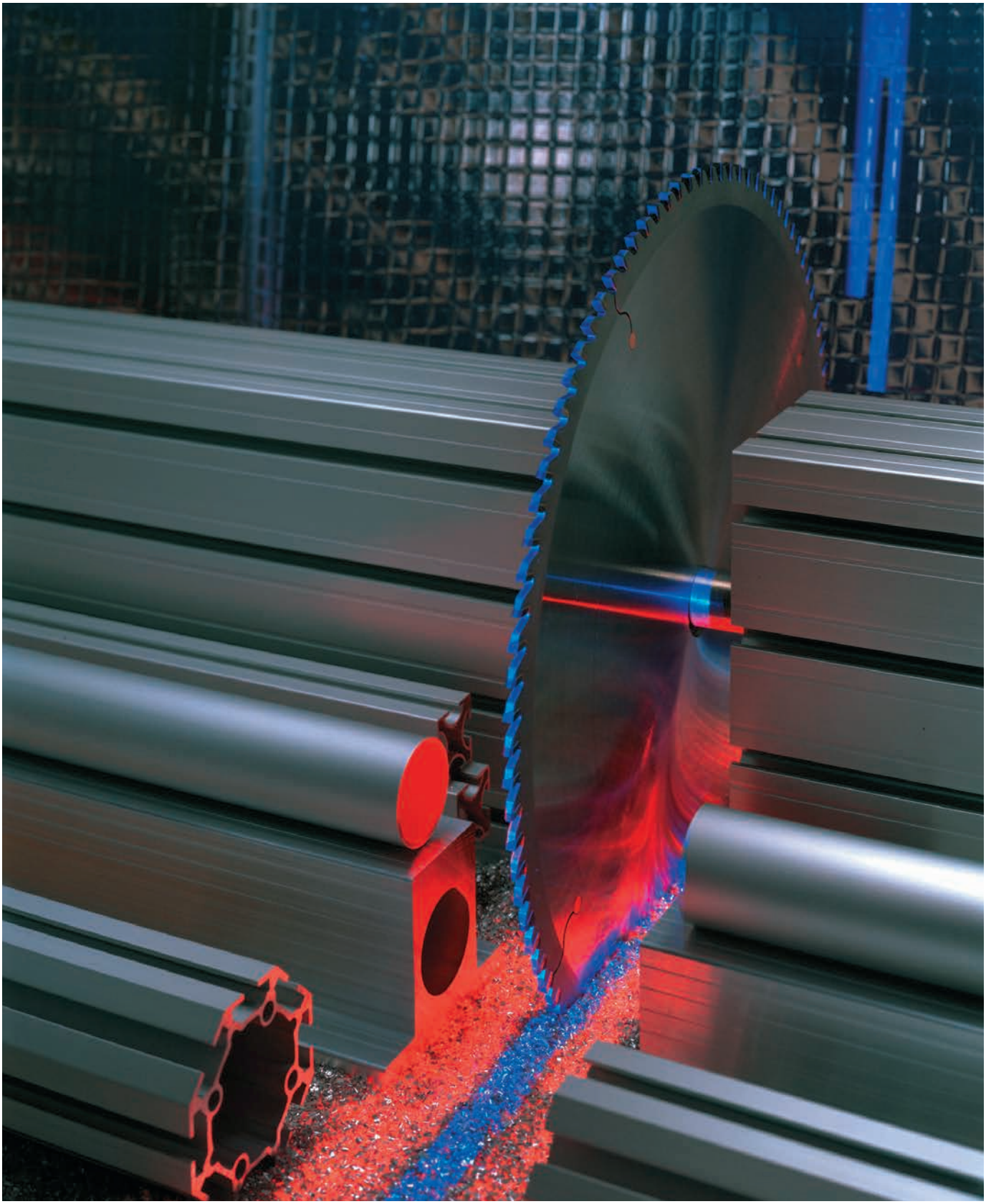

Ordering overview
Extrusion machining codes

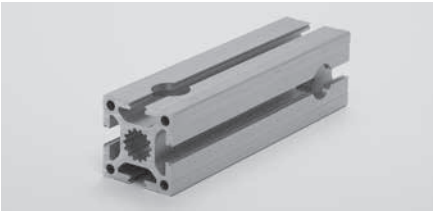

The order number is made up of the type of extrusion, with the machining code for each end and the length of the extrusion. The available codes for the machining are listed on the following chart. The code covers the most standard machining.

Special machinings are indicated with the order code «–99». In this case, a customer drawing is requested!

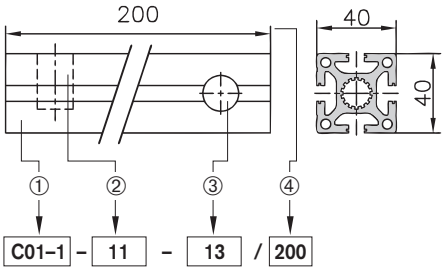

Order number
with standard machining

Order number
with additional special machining, the order code also indicates –99

Example: **C01–1 – 11 – 13 – 99 / 200**

An item number is made up of the following:

① Select the appropriate design or special extrusion (extrusion type)
② Define the machining on the left side of the extrusion according to the following overview if the left side of the extrusion is to be left unmachined: Code –02
③ Define the machining on the right side of the extrusion according to the following overview if the right side of the extrusion is to be left unmachined: Code –02
④ Indicate the required extrusion length in mm/L

Special machining:
⑤ –99

MACHINING INFORMATION			MACHINING CODES (MC)
1.	**Cutting the extrusions to length without any other machining** Extrusion cut to length, tolerance acc. to ISO 2768-m Example: C01–1–02–02/L	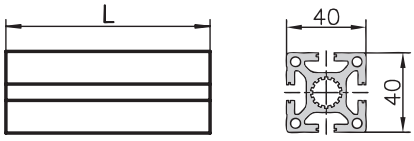	–02
2a.	**Cutting the extrusions to length and the main threads**		
1 thread	M16 / M14 x thread length 50mm	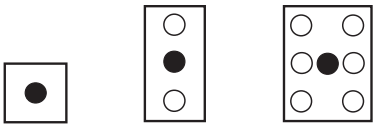	–E1
	M16 / M14 x thread length 100mm		–03
	M16 / M14 x thread length 25mm		–E3
1 Heli-Coil insert	M6 x ~10mm (only for Ø 6mm)*		–H3
2 thread	M16 / M14 x thread length 50mm	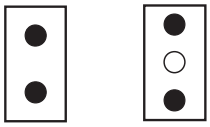	–E2
	M16 / M14 x thread length 100mm		–04
	M16 / M14 x thread length 25mm		–E4
2 Heli-Coil inserts	M6 x ~10mm (only for Ø 6mm)*		–H4

* Only for 20 base extrusions with core Ø 6mm

MACHINING INFORMATION			MACHINING CODES (MC)
2a. Cutting the extrusions to length and the main threads			
3 threads	M16 / M14 x thread length 50		–G3
	M16 / M14 x thread length 100		–05
	M16 / M14 x thread length 25		–E5
4 threads	M16 / M14 x thread length 50	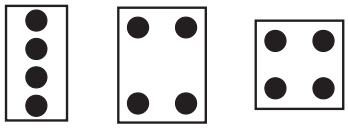	–G4
	M16 / M14 x thread length 100		–06
	M16 / M14 x thread length 25		–E6
6 threads	M16 / M14 x thread length 50		–G5
	M16 / M14 x thread length 100		–G6
	M16 / M14 x thread length 25		–E7
8 threads	M16 / M14 x thread length 50	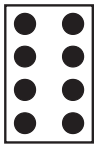	–G7
	M16 / M14 x thread length 100		–G8
	M16 / M14 x thread length 25		–E8
2b. Cutting the extrusions to length and auxiliary threads in the corners			
4 threads	M6 x thread length 15mm	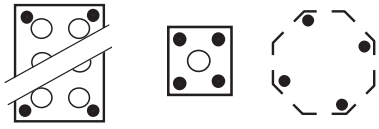	–07
4 threads	M8 x thread length 20mm		–08
	Example: C01–1**–07-02**/L on one side 4x M6x15	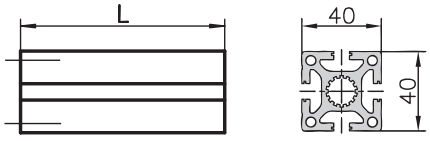	
2c. Cutting the extrusions to length and threads according to drawing			
X thread acc. to customer drawing			–09

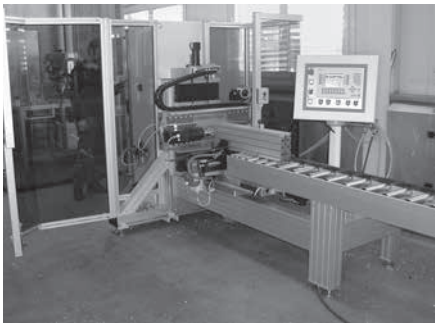

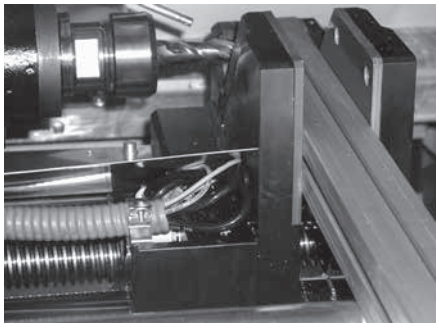

MACHINING INFORMATION		MACHINING CODES (MC)
3. Cutting the extrusions to length and PVS drilling		
1 PVS hole	Symbolic representation of the extrusion cross-sections	
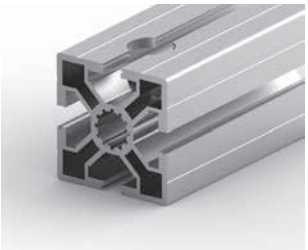	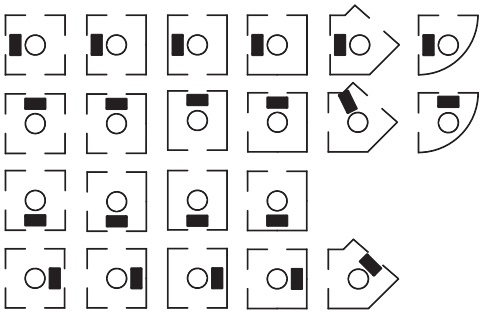	–10
		–11
		–12
		–13
1 PVS hole acc. to customer drawing		–19
2 PVS holes	Symbolic representation of the extrusion cross-sections	
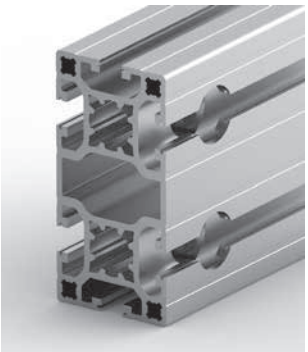	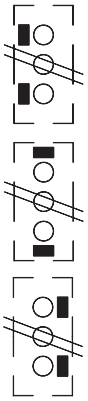	–20
		–21
		–23
2 PVS holes acc. to customer drawing		–29
3 PVS holes	Symbolic representation of the extrusion cross-sections	
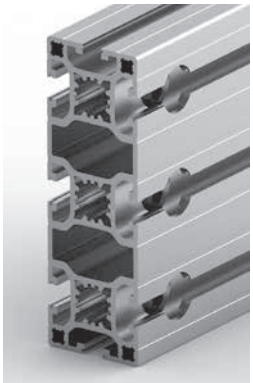	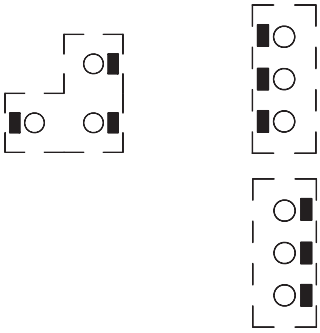	–30
		–33
3 PVS holes acc. to customer drawing		–39

*A different arrangement of the holes must be indicated on the drawing.

MACHINING INFORMATION		MACHINING CODES (MC)
3. Cutting the extrusion to length and PVS drilling		
4 PVS holes	Symbolic representation of the extrusion cross-sections	
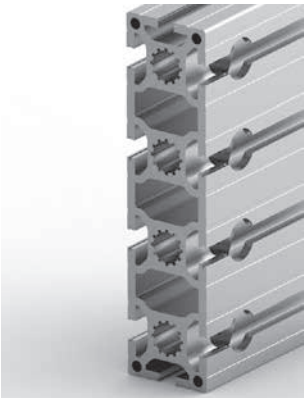	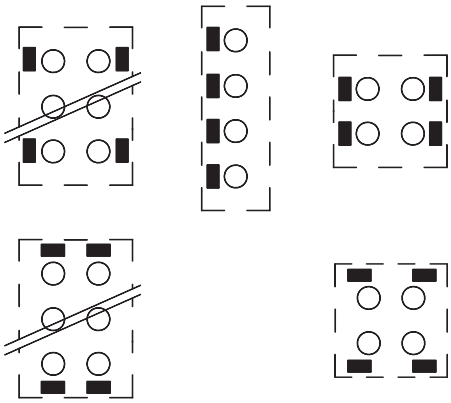	–40 –41
4 PVS holes acc. to customer drawing		–49
6 PVS holes	Symbolic representation of the extrusion cross-sections	
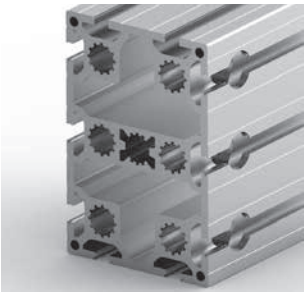	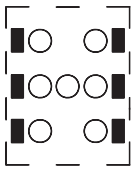	–60
6 PVS holes acc. to customer drawing		–69
8 PVS holes	Symbolic representation of the extrusion cross-sections	
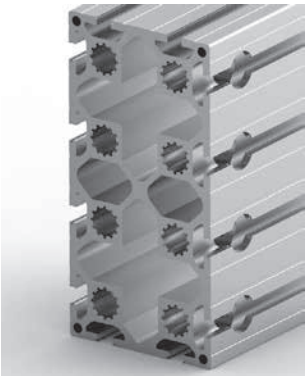	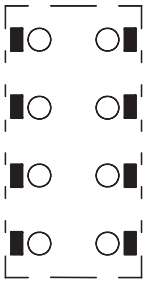	–80
8 PVS holes acc. to customer drawing		–89

MACHINING INFORMATION	MACHINING CODES (MC)	
	left	**right**
Mitre cut extrusions		
For mitre cuts on non-symmetrical extrusions, a drawing or sketch is required.		
Mitre cut 45° (all extrusions)		
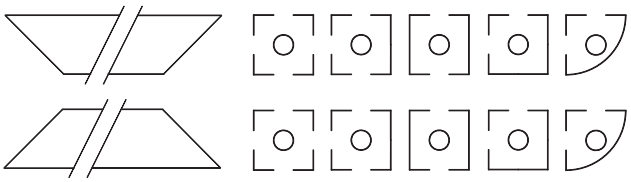	–50	–50
	–51	–51
Mitre cut acc. to customer drawing	–59	–59
Mitre cut extrusions with PVS-drilling		
Mitre cut 45° + PVS hole (extrusions 50x50/40x40/30x30/20x20)		
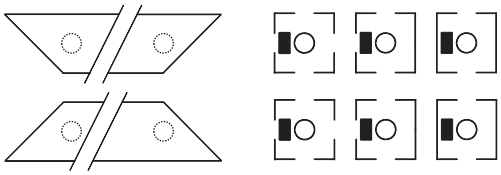	–70	–70
	–71	–71
Mitre cut 45° + 2 PVS holes		
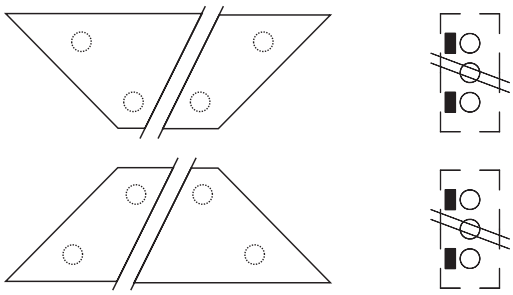	–72	–72
	–73	–73
Mitre cut 45° + 4 PVS holes		
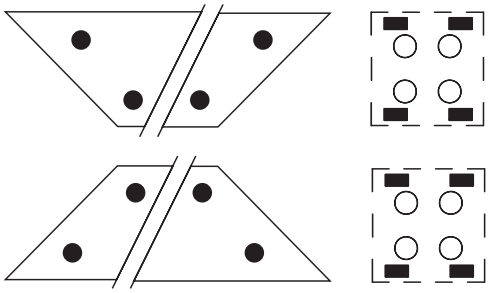	–74	–74
	–75	–75
Mitre cut + PVS hole(s) acc. to customer drawing	–79	–79
6. Special machining		
All machining which cannot be indicated by a code.		–99

Four sided softline extrusion 50x50 type A10–0

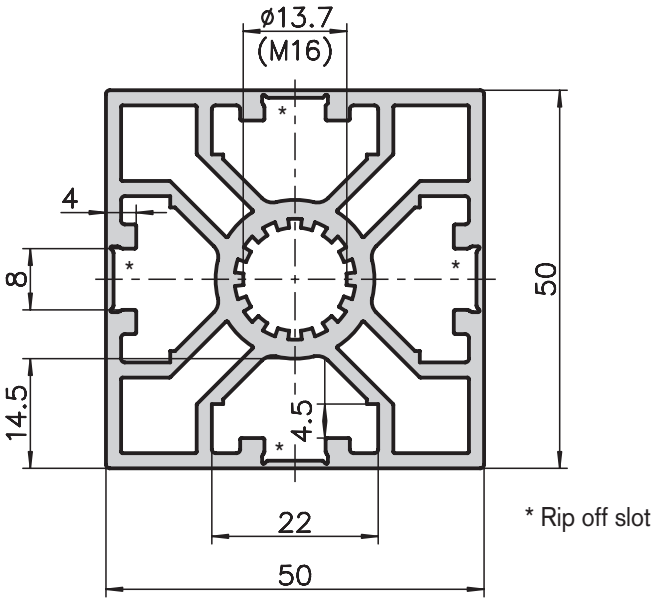

Application

The 50 series Softline extrusion is used to create stable, attractive and easily washable constructions. Ideal for clean room applications. Due to the small curved corners, there are no dirt grooves with a T-connection. A very decorative extrusion which offers the designer many application possibilities whilst at the same time also being lightweight and inexpensive.

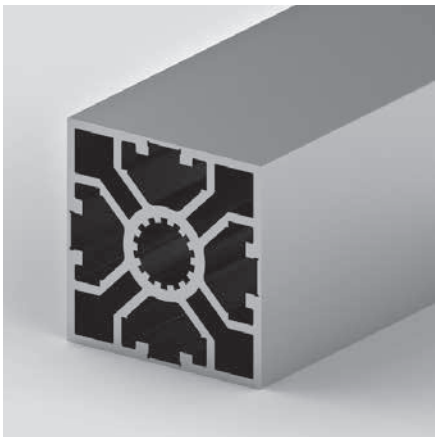

Technical data		
Ix,y	=	20.55 cm^4
Wx,y	=	8.22 cm^3
Cross-section area	=	8.38 cm^2
Weight	=	2.26 kg/m

Order data	Order number
Four sided softline extrusion 50x50 Standard length 5000 mm	A10–0–00/5000
Four sided softline extrusion 50x50 Cut to length	A10–0–02–02/…
Extra machining	Pages 57–61

Lightweight extrusion 50x50 type A02–1

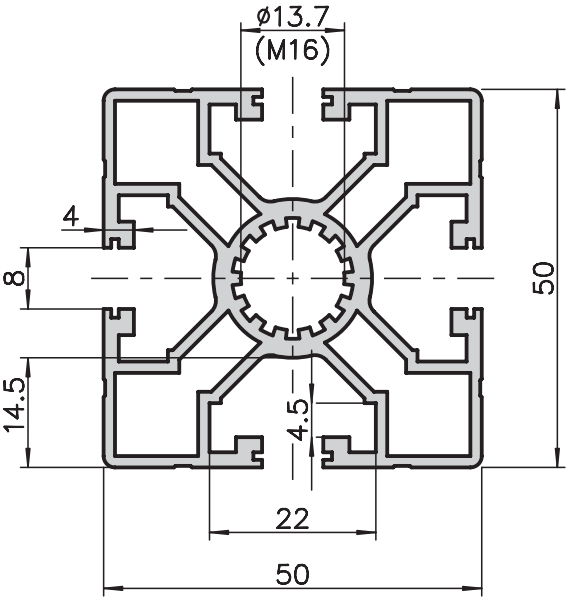

Application

The light extrusion 50x50 offers many possibilities to the budged-minded engineer. Whether for machine guarding or machine chassis, in a light build version, this universal extrusion offers tremendous value.

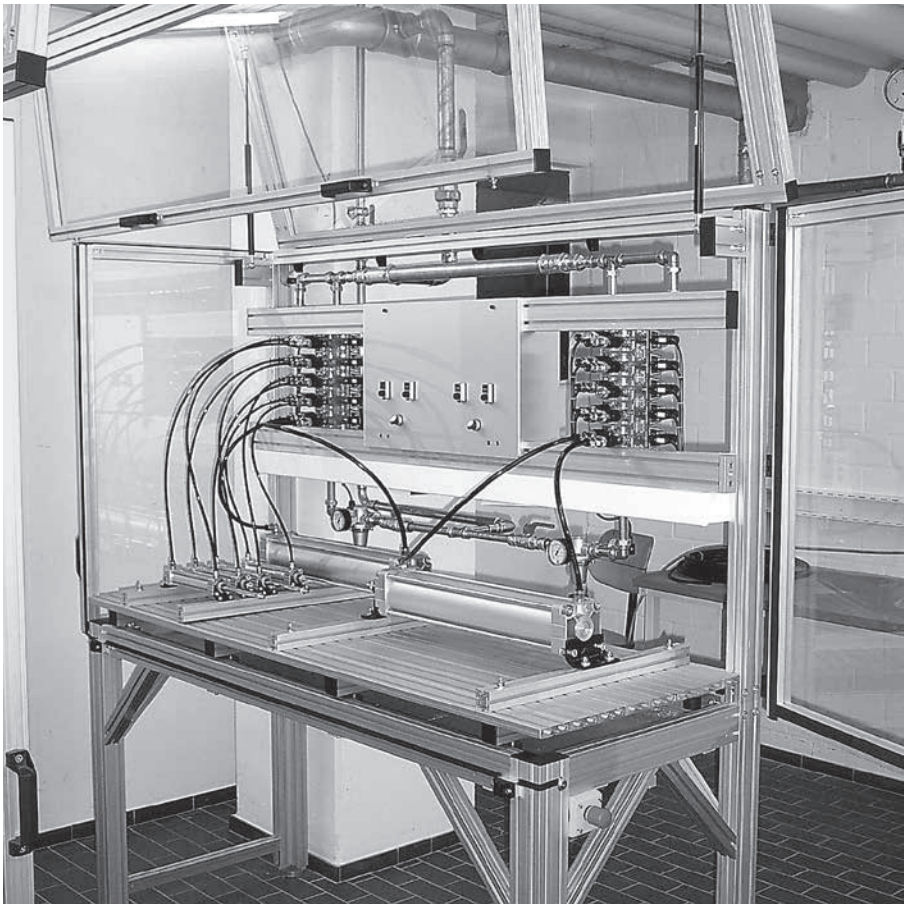

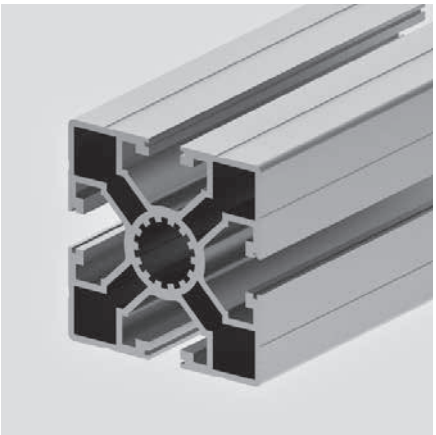

Technical data		
Ix,y	=	16.07 cm^4
Wx,y	=	6.42 cm^3
Cross-section area	=	6.71 cm^2
Weight	=	1.8 kg/m

Order data	Order number
Lightweight extrusion 50x50 Standard length 5000 mm	A02–1–00/5000
Lightweight extrusion 50x50 Cut to length	A02–1–02–02/…
Extra machining	Pages 57–61

50x50 base extrusion type A01–1

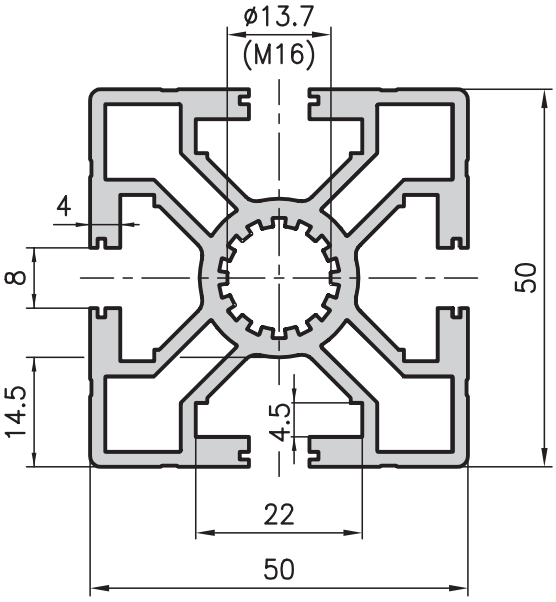

50x50 heavy duty extrusion type MA1–1

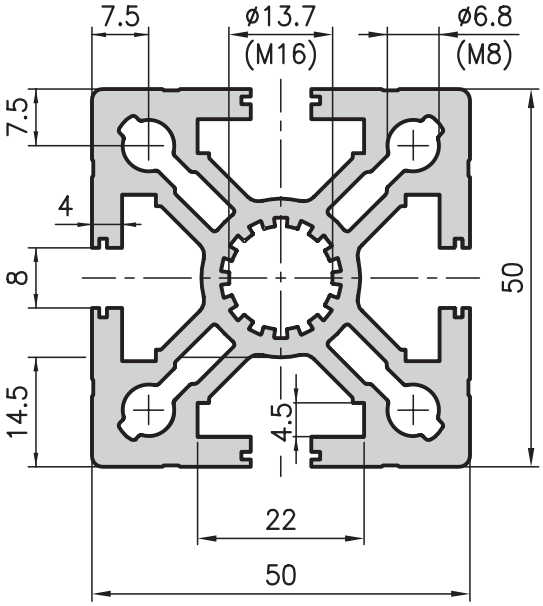

Application

These two extrusions are suitable for most design tasks thanks to their excellent weight and strength properties. Their useful features include holes for direct threading and small guide slots to cover the openings in the extrusions with aluminium strips, 0.8x10 page 180.

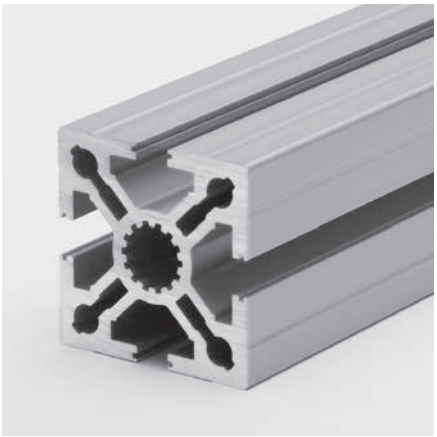

Technical data

Ix,y	=	20.88 cm^4
Wx,y	=	8.35 cm^3
Cross-section area	=	8.55 cm^2
Weight	=	2.3 kg/m

Order data	Order number
50x50 base extrusion	
Standard length 5000 mm	A01–1–00/5000
Standard length 6000 mm	A01–1–01/6000
50x50 base extrusion	
Cut to length	A01–1–02–02/…
50x50 base extrusion raw	A01–1–R0/5000
Cut to length	A01–1–R0–02–02/…

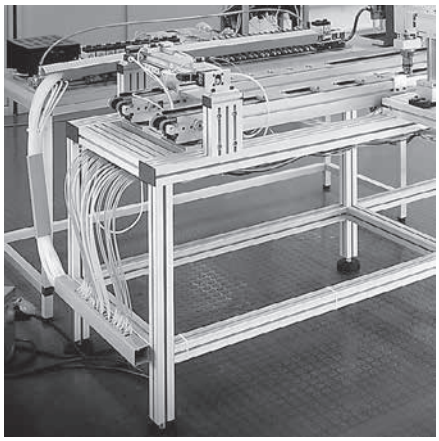

Extra machining Pages 57–61

Technical data

Ix,y	=	29.37 cm^4
Wx,y	=	11.75 cm^3
Cross-section area	=	11.26 cm^2
Weight	=	3.1 kg/m

Order data	Order number
50x50 heavy duty extrusion	
Standard length 5000 mm	MA1–1–00/5000
Standard length 6000 mm	MA1–1–01/6000
50x50 heavy duty extrusion	
Cut to length	MA1–1–02–02/…

Extra machining Pages 57–61

50x50 face extrusion type A01–8

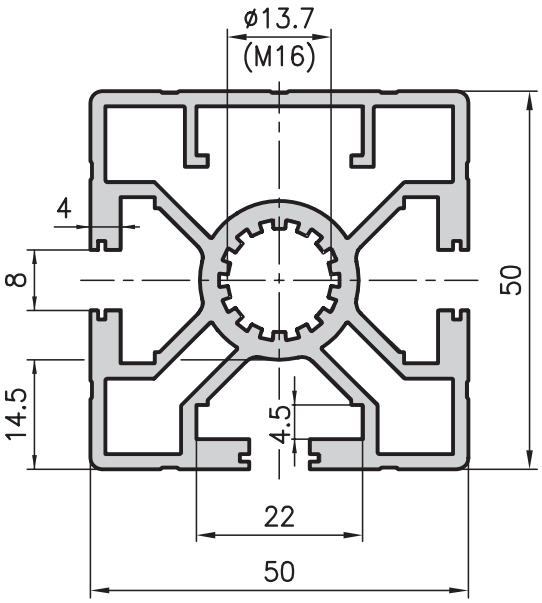

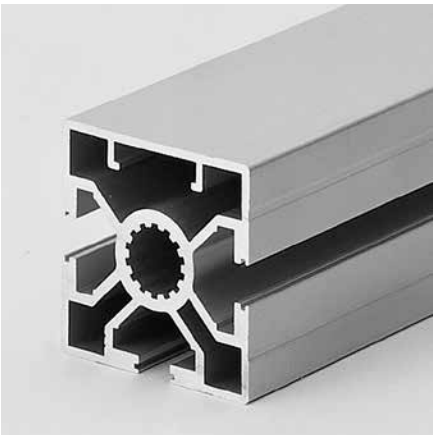

Technical data

Ix	=	20.38 cm^4
Iy	=	19.61 cm^4
Wx	=	8.15 cm^3
Wy	=	7.55 cm^3
Cross-section area	=	8.01 cm^2
Weight	=	2.2 kg/m

Order data	Order number
50x50 face extrusion Standard length 5000 mm	A01–8–00/5000
50x50 face extrusion Cut to length	A01–8–02–02/…
Extra machining	Pages 57–61

Application

Corner and face extrusions are used in any applications where closed surfaces are required. The advantages of these are that they improve the appearance of the structures and also minimise the build up of dirt. Extrusions can be fitted onto the closed faces by drilling holes in the outer face of the extrusion at the required points and using AC32–... type threaded plates. The small lugs inside the extrusion guide the plates.

50x50 corner extrusion type A01–7

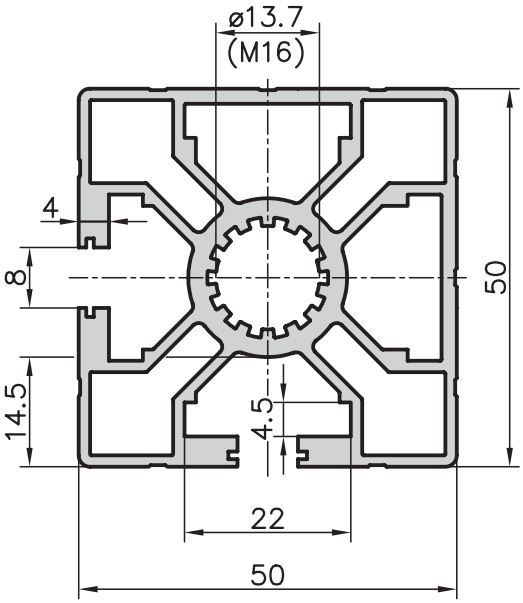

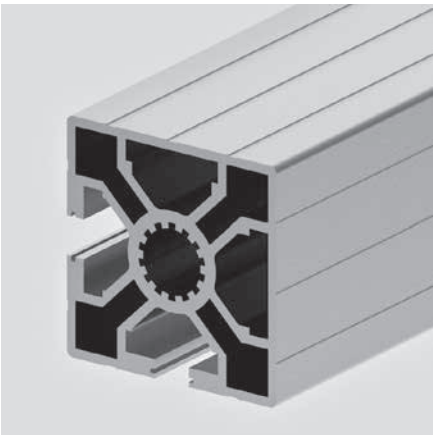

Technical data

Ix,y	=	17.7 cm^4
Wx,y	=	7.05 cm^3
Cross-section area	=	7.5 cm^2
Weight	=	2.0 kg/m

Order data	Order number
50x50 corner extrusion Standard length 5000 mm	A01–7–00/5000
50x50 corner extrusion Cut to length	A01–7–02–02/…
Extra machining	Pages 57–61

50x50 double face extrusion type A02–4

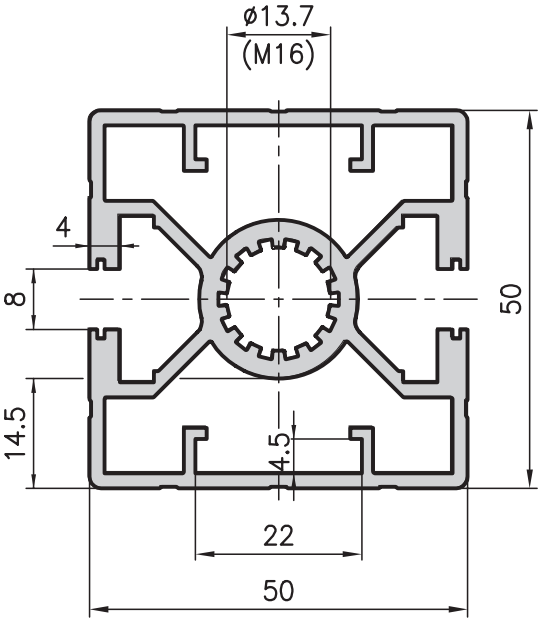

50x45° angle extrusion type A02–8

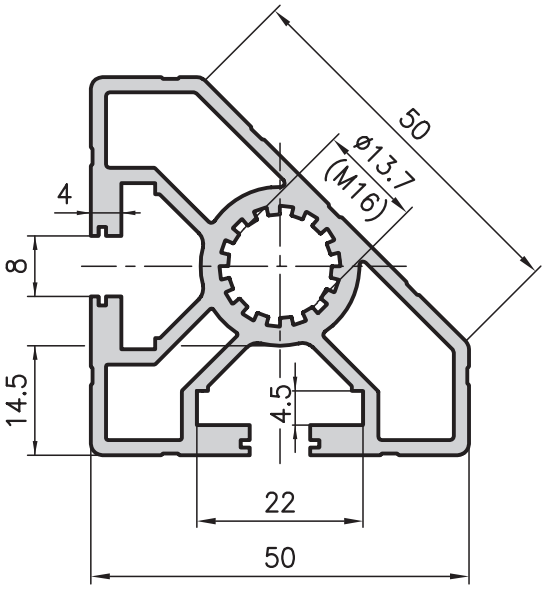

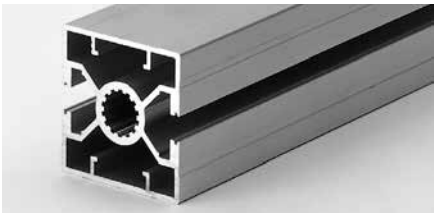

Application
For all types of enclosure, as well as for structures with extrusion faces which are mainly closed and for applications with an attractive design.

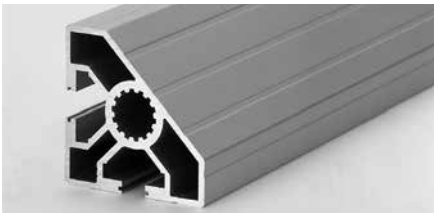

Technical data		
Ix	=	19.59 cm^4
Iy	=	18.17 cm^4
Wx	=	7.83 cm^3
Wy	=	7.27 cm^3
Cross-section area	=	7.39 cm^2
Weight	=	2.0 kg/m

Order data	Order number
50x50 double face extrusion Standard length 5000 mm	A02–4–00/5000
50x50 double face extrusion Cut to length	A02–4–02–02/…
Extra machining	Pages 57–61

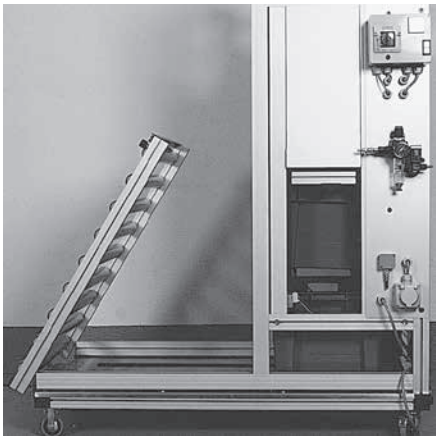

Technical data		
Ix,y	=	13.10 cm^4
Wx,y	=	4.50 cm^3
Cross-section area	=	6.40 cm^2
Weight	=	1.7 kg/m

Order data	Order number
50x45° angle extrusion Standard length 5000 mm	A02–8–00/5000
50x45° angle extrusion Cut to length	A02–8–02–02/…
Extra machining	Pages 57–61

50x50 face extrusion with rip off panel slots type A03–8

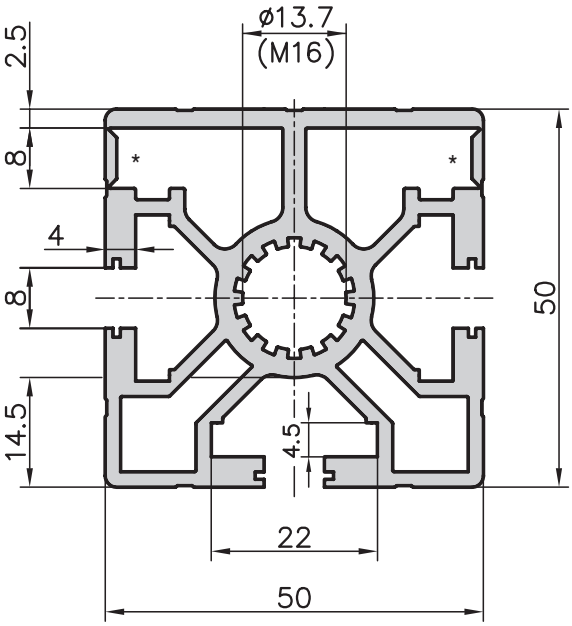

* rip off slot

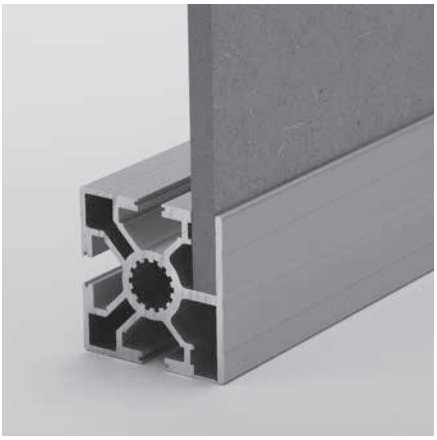

Application

The one face closed extrusion gives the possibility to open a slot to insert a panel, ideal for delicate solar-panels. Rip off the slot, if necessary put in a sealing strip, insert panels and mount the frame. The 8 mm panels fit perfectly in the rip off slot.

Technical data		
Ix	=	20.40 cm^4
Iy	=	19.72 cm^4
Wx	=	8.07 cm^3
Wy	=	7.89 cm^3
Cross-section area	=	8.28 cm^2
Weight	=	2.2 kg/m

Order data	Order number
50x50 face extrusion with rip off slot	
Standard length 5000 mm	A03–8–00/5000
50x50 face extrusion with rip off slot	
Cut to length	A03–8–02–02/…
Extra machining	Pages 57–61

50x100 base extrusion type A01–2

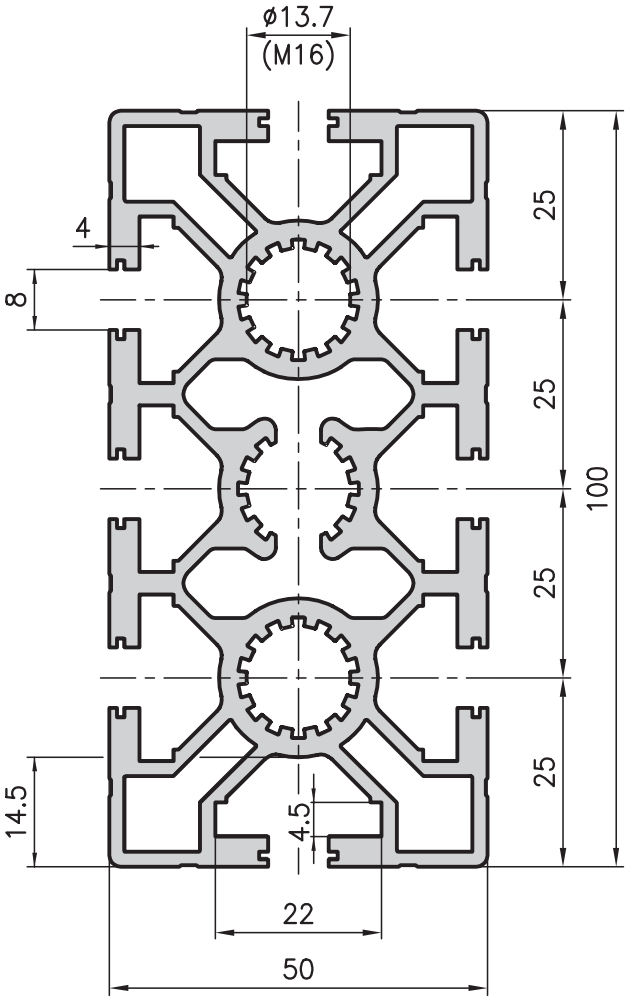

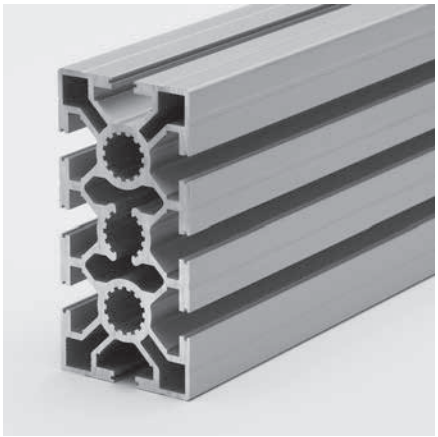

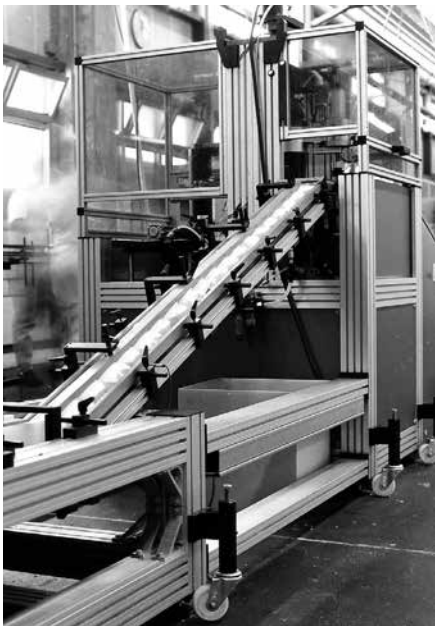

Technical data		
Ix	=	149.84 cm^4
Iy	=	41.25 cm^4
Wx	=	29.97 cm^3
Wy	=	16.50 cm^3
Cross-section area	=	16.84 cm^2
Weight	=	4.6 kg/m

Order data	Order number
50x100 base extrusion	
Standard length 5000 mm	A01–2–00/5000
Standard length 6000 mm	A01–2–01/6000
50x100 base extrusion	
Cut to length	A01–2–02–02/…
Extra machining	Pages 57–61

Application

This base extrusion is normally used for cross-beams. Further, its optimised cross section means that it is ideal for an extremely wide range of applications.

50x100 heavy duty extrusion type MA1–2

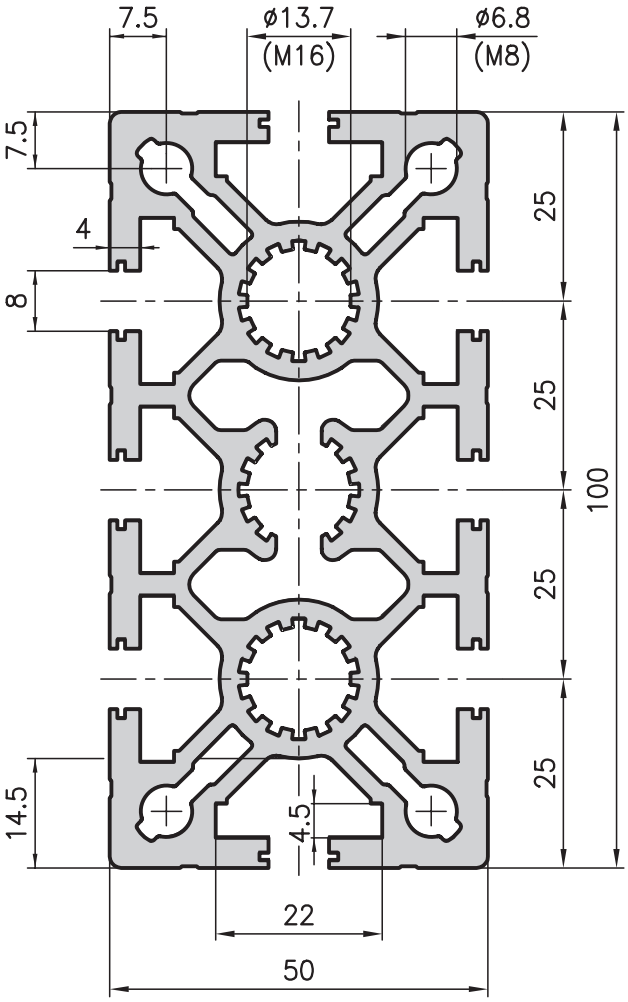

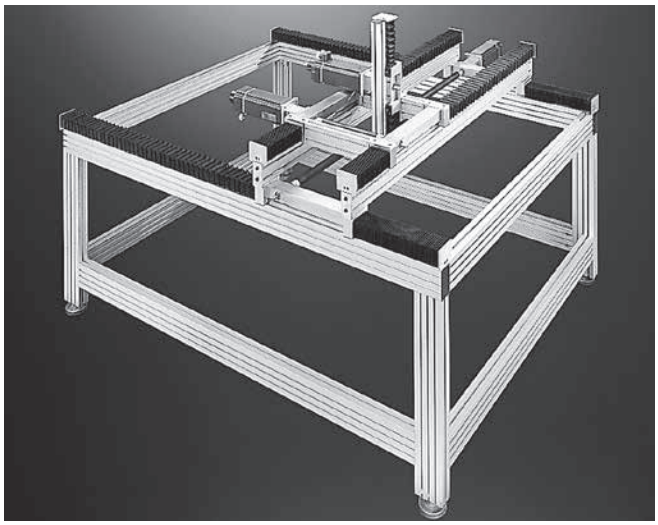

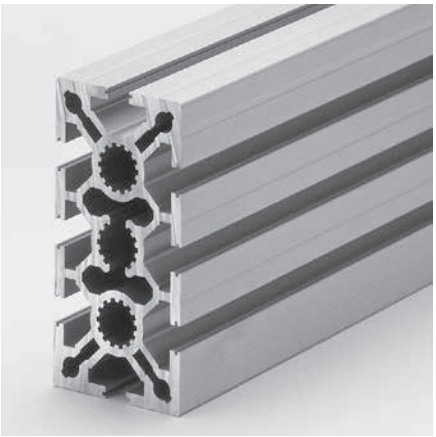

Application

The heavy duty extrusion, like the A01–2 type base extrusion, is commonly used as a cross-beam. However, this design can also be used in many different applications combining excellent load-bearing capabilities and a lightweight structure!

Technical data		
Ix	=	198.66 cm^4
Iy	=	50.28 cm^4
Wx	=	39.73 cm^3
Wy	=	20.11 cm^3
Cross-section area	=	19.79 cm^2
Weight	=	5.3 kg/m

Order data	Order number
50x100 heavy duty extrusion	
Standard length 5000 mm	MA1–2–00/5000
Standard length 6000 mm	MA1–2–01/6000
50x100 heavy duty extrusion	
Cut to length	MA1–2–02–02/...
Extra machining	Pages 57–61

50x100 face extrusion type MA1–4

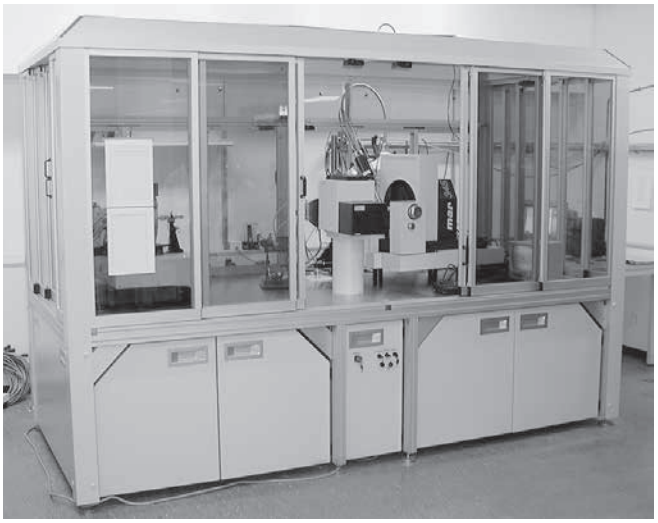

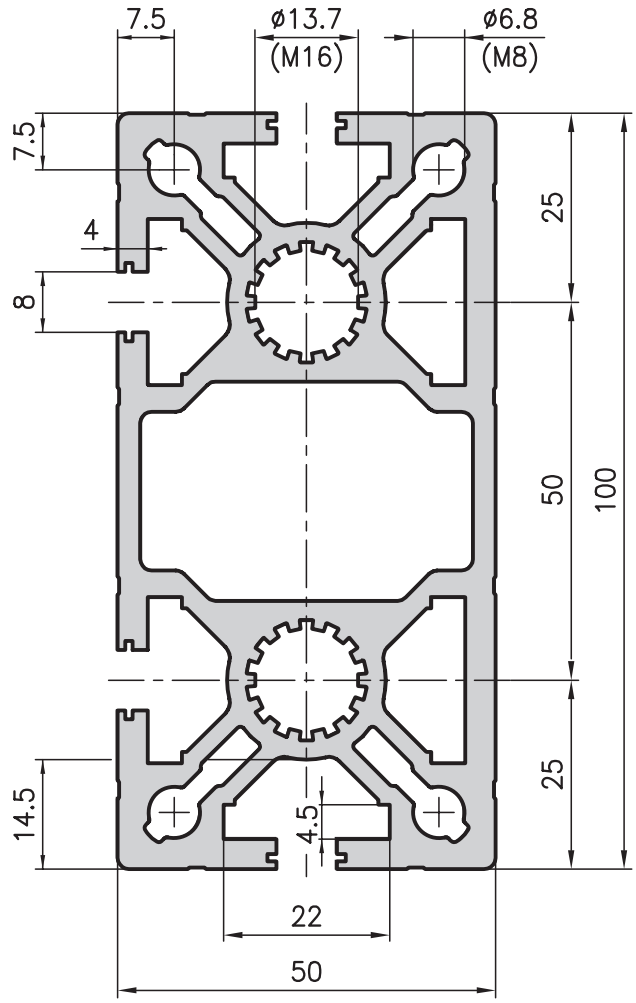

Technical data		
Ix	=	203.67 cm^4
Iy	=	54.31 cm^4
Wx	=	40.73 cm^3
Wy	=	21.03 cm^3
Cross-section area	=	19.34 cm^2
Weight	=	5.2 kg/m

Order data	Order number
50x100 face extrusion	
Standard length 5000 mm	MA1–4–00/5000
Standard length 6000 mm	MA1–4–01/6000
50x100 face extrusion	
Cut to length	MA1–4–02–02/...
Extra machining	Pages 57–61

Application

An extrusion which boasts all the advantages of the comparable A01–2 and MA1–2. In addition, its large inner cavity can be used to channel air, gas, water, oil, etc. The driving belt on a twin-belt conveyor can also be fed back in this chamber. The sealed face keeps dirt out. The extrusion can be extended using the closed threaded-plate slots. Simply drill a hole, place a threaded plate behind the hole and carry on building!

100x100 base extrusion type MA2–5

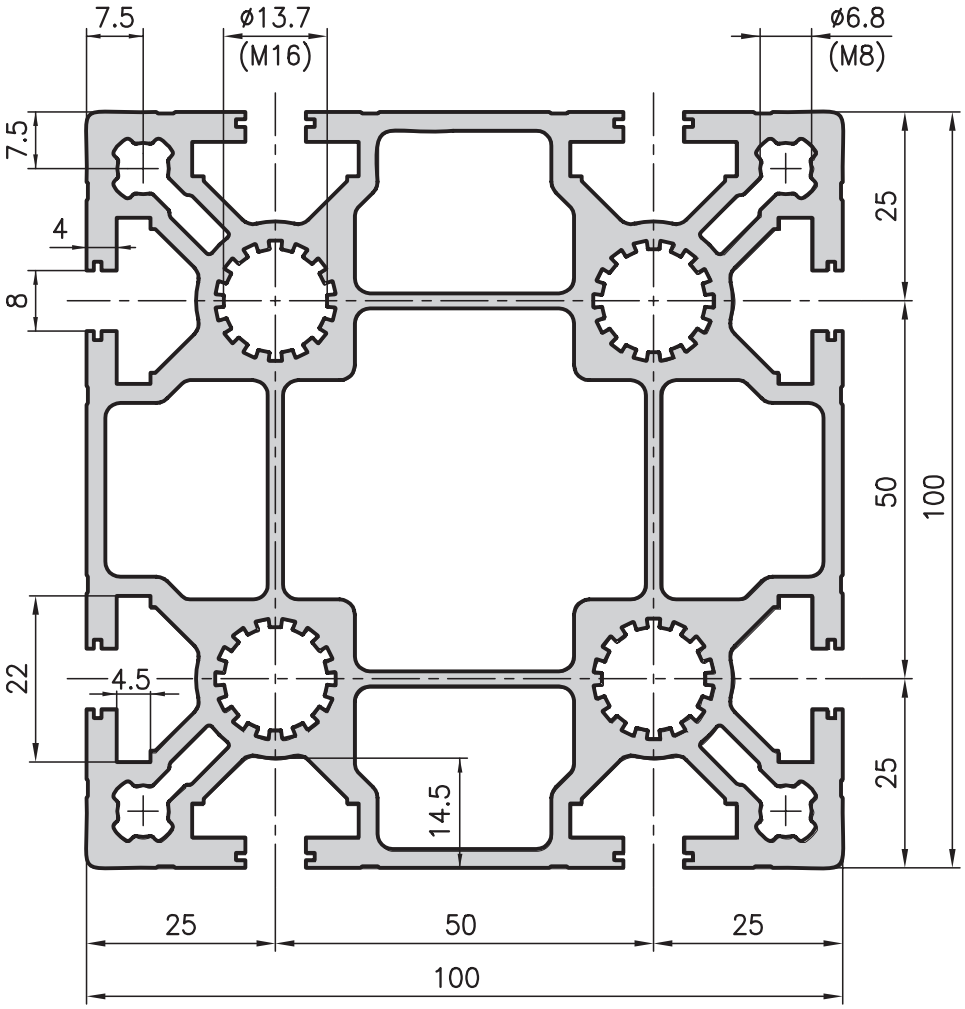

Application

This versatile extrusion is mainly used in machinery and plant construction and boasts the following qualities:

– high strength
– excellent torsional rigidity
– low weight

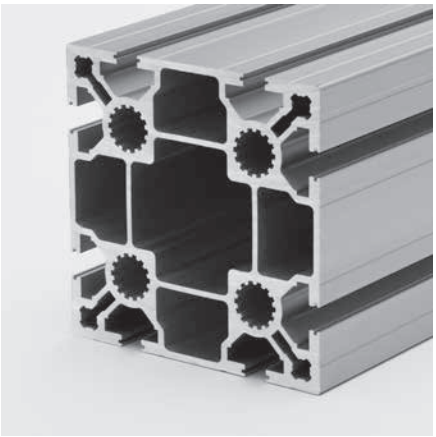

Technical data		
Ix,y	=	324.73 cm^4
Wx,y	=	64.95 cm^3
Cross-section area	=	30.00 cm^2
Weight	=	8.1 kg/m

Order data	Order number
100x100 base extrusion	
Standard length 5000 mm	MA2–5–00/5000
Standard length 6000 mm	MA2–5–01/6000
100x100 base extrusion	
Cut to length	MA2–5–02–02/…
Extra machining	Pages 57–61

100x100 heavy duty extrusion type MA1–5

Application
An extremely sturdy extrusion which is used as a support, stand or manifold. Ideal for building gantries if used in combination with the 100x200 heavy duty extrusion, MA1–9.

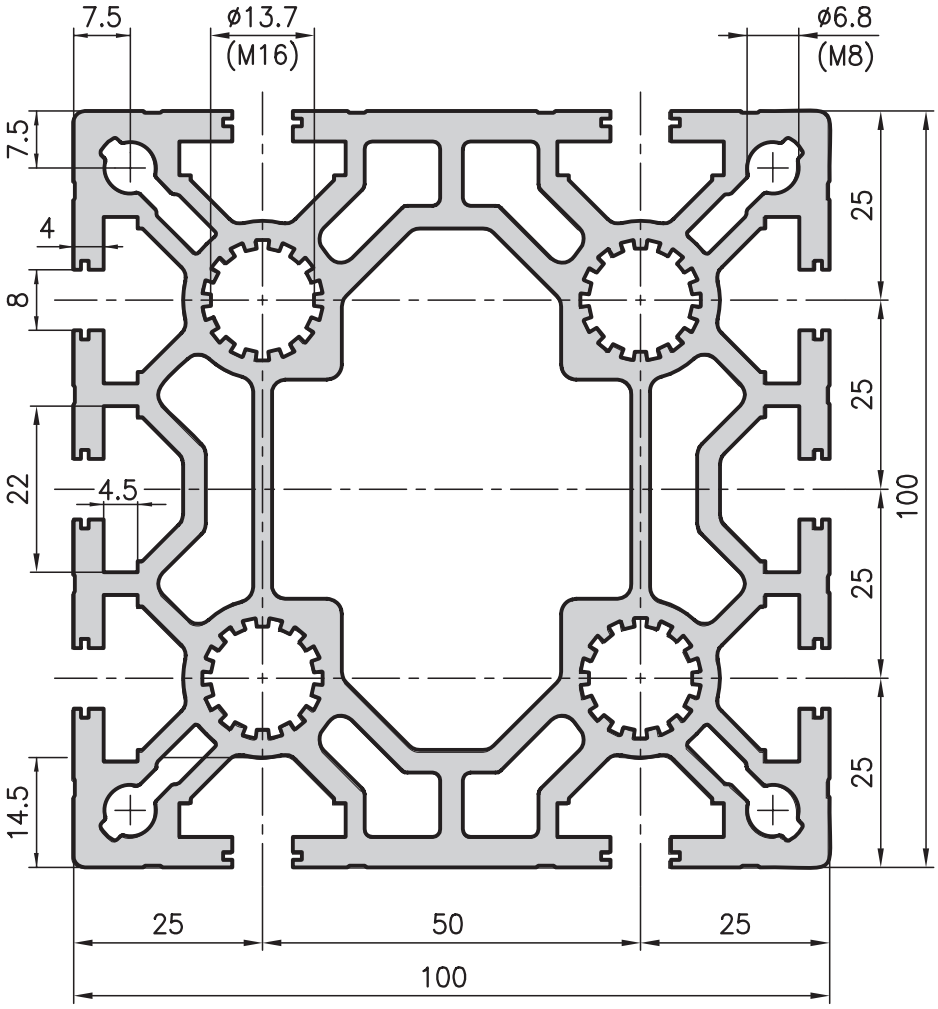

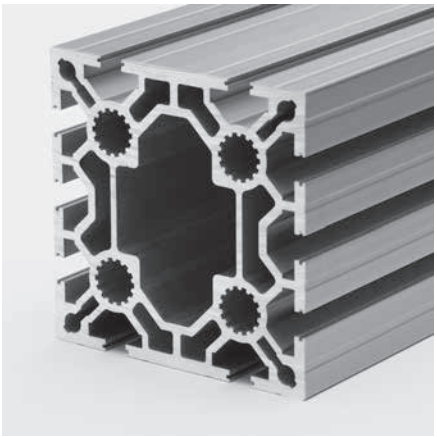

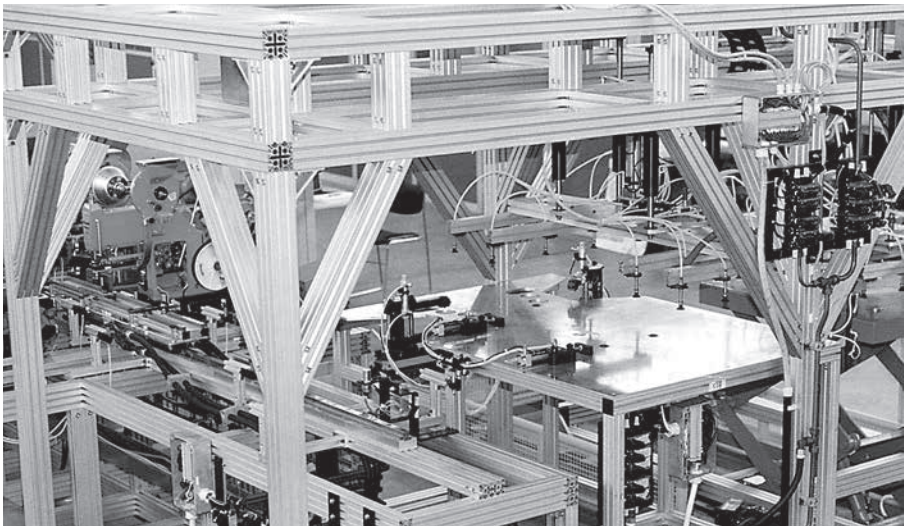

Technical data		
Ix	=	380.00 cm^4
Iy	=	365.00 cm^4
Wx	=	76.00 cm^3
Wy	=	73.00 cm^3
Cross-section area	=	35.19 cm^2
Weight	=	9.5 kg/m

Order data	Order number
100x100 heavy duty extrusion	
Standard length 5000 mm	MA1–5–00/5000
Standard length 6000 mm	MA1–5–01/6000
100x100 heavy duty extrusion	
Cut to length	MA1–5–02–02/…
Extra machining	Pages 57–61

Corner extrusion 100x100
Type A03–7

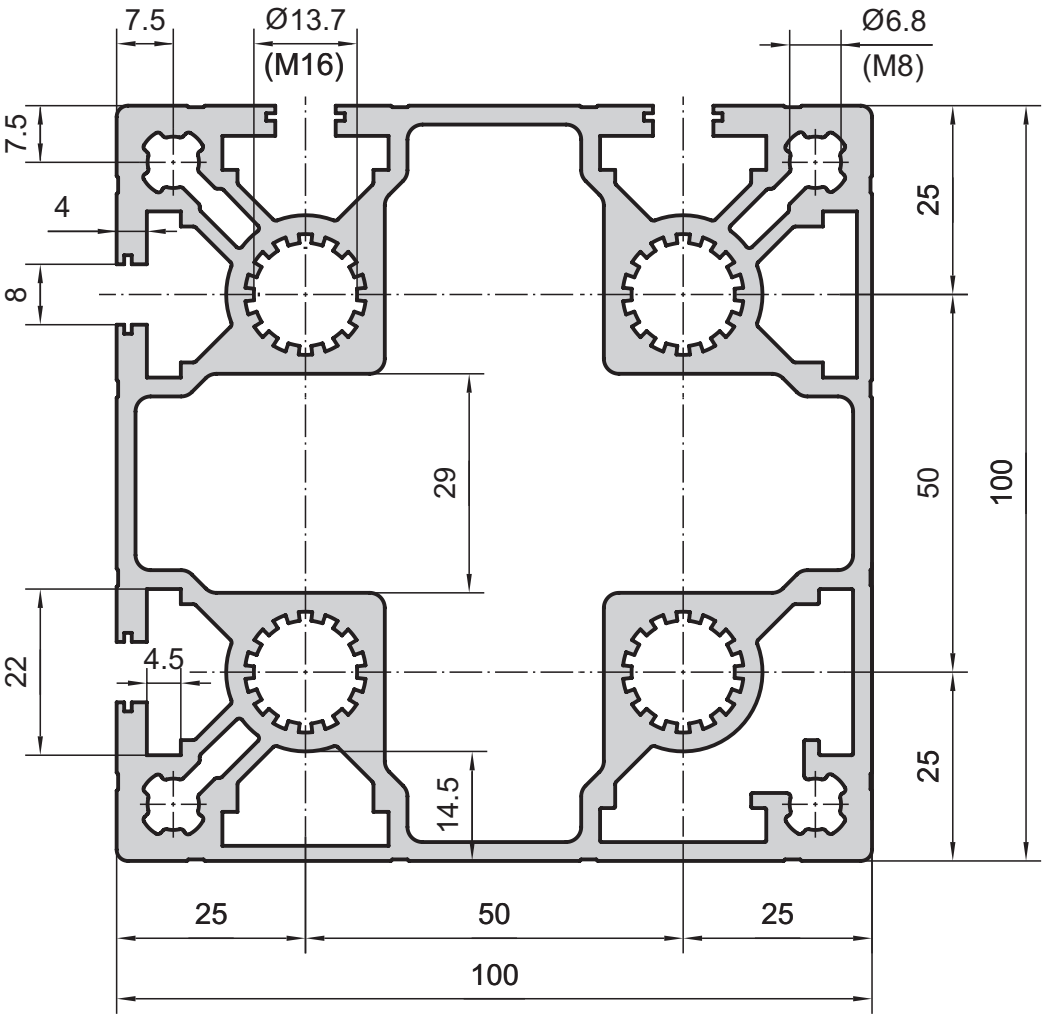

Technical data		
Ix, y	=	314.10 cm^4
Wx, y	=	62.82 cm^3
Cross-section area	=	26.30 cm^2
Weight	=	7.10 kg/m

Order data	Order number
Corner extrusion 100x100	
Standard length 5000 mm	A03–7–00/5000
Corner extrusion 100x100	
Cut to length	A03–7–02–02/…
Extra machining	Pages 57–61

Application

Corner extrusions are always used when closed surfaces are required. Particularly with larger machine casings, this extrusion is frequently used as a corner pillar that can absorb weight at the same time, but also optimises the look of the machine. With a base plate (A47–80) a central adjustable foot can also be installed.

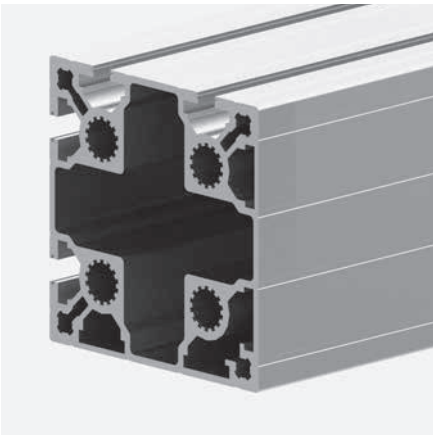

50x150 beam extrusion type MA1–3

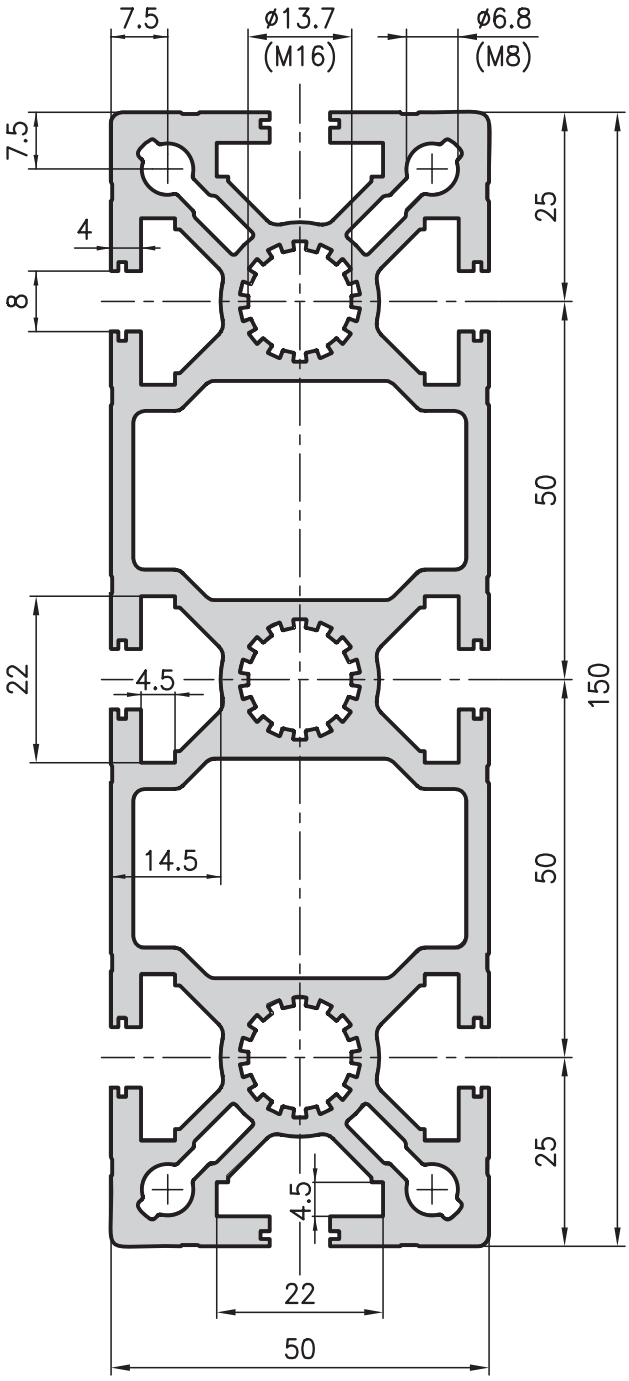

Application

As the name suggests, this extrusion is mainly used to support heavy loads because of its excellent load-bearing characteristics. However, it is also an effective manifold extrusion.

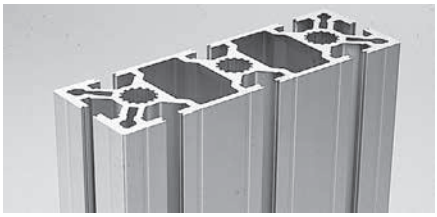

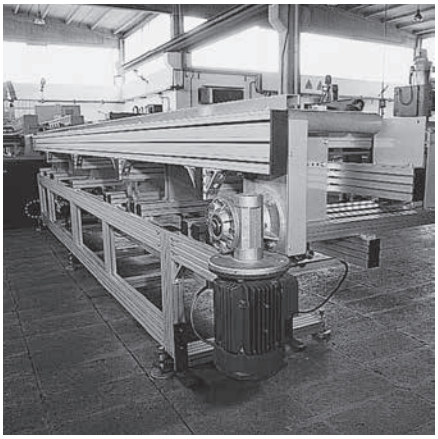

Technical data		
Ix	=	608.31 cm^4
Iy	=	73.56 cm^4
Wx	=	81.11 cm^3
Wy	=	29.42 cm^3
Cross-section area	=	26.04 cm^2
Weight	=	7.1 kg/m

Order data	Order number
50x150 bearing extrusion	
Standard length 5000 mm	MA1–3–00/5000
Standard length 6000 mm	MA1–3–01/6000
50x150 bearing extrusion	
Cut to length	MA1–3–02–02/...
Extra machining	Pages 57–61

Beam extrusion 50x200 type MA1–6

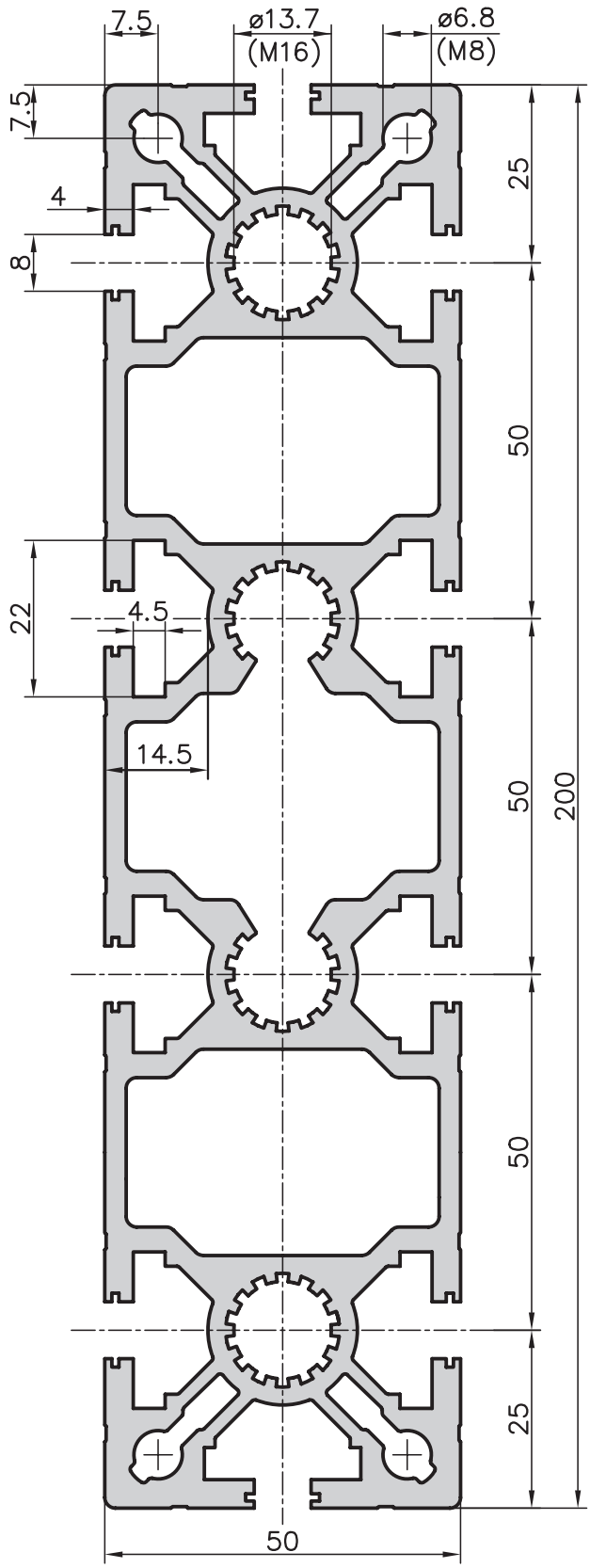

Application

An optimum extrusion for large gantries and stable cross-beams. Together with the extrusion MA1–9, large robust constructions can be created. Similar to the MA1–3, this extrusion is mainly used to support heavy loads because of its excellent load-bearing characteristics.

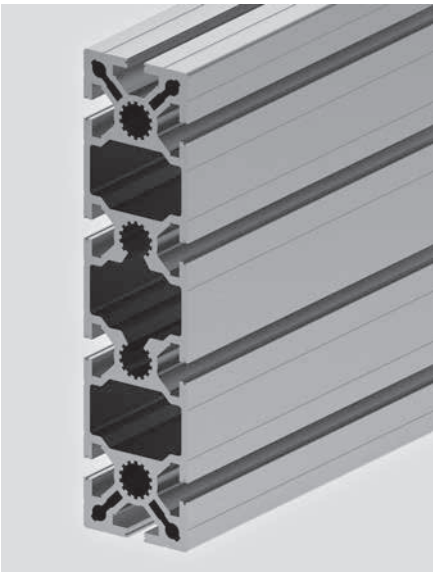

Technical data		
Ix	=	1315.83 cm^4
Iy	=	92.71 cm^4
Wx	=	131.58 cm^3
Wy	=	37.08 cm^3
Cross-section area	=	32.74 cm^2
Weight	=	8.84 kg/m

Order data	Order number
Beam extrusion 50x200 Standard length 6000 mm	MA1–6–01/6000
Beam extrusion 50x200 Cut to length	MA1–6–02–02/…
Extra machining	Pages 57–61

100x200 heavy duty extrusion type MA1–9

Application

Ideal for building gantries in which the supports are spaced well apart or for any application where very heavy loads have to be borne with minimal bending.

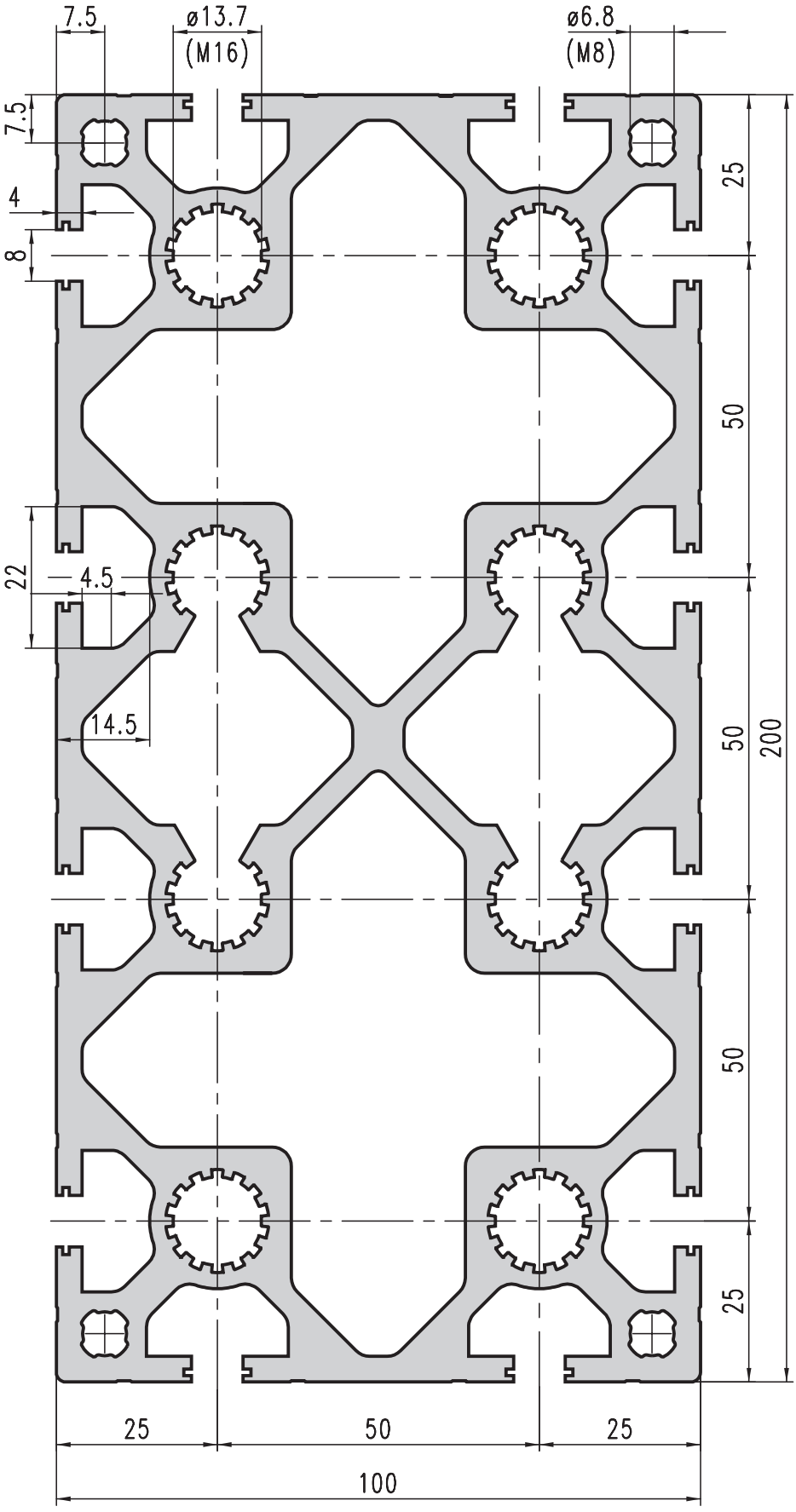

Technical data		
Ix	=	2435.30 cm^4
Iy	=	705.60 cm^4
Wx	=	243.53 cm^3
Wy	=	141.12 cm^3
Cross-section area	=	60.79 cm^2
Weight	=	16.41 kg/m

Order data	Order number
100x200 heavy duty extrusion	
Standard length 5000 mm	MA1–9–00/5000
Standard length 6000 mm	MA1–9–01/6000
100x200 heavy duty extrusion	
Cut to length	MA1–9–02–02/…
Extra machining	Pages 57–61

Four sided softline extrusion 45x45 Type E10–1

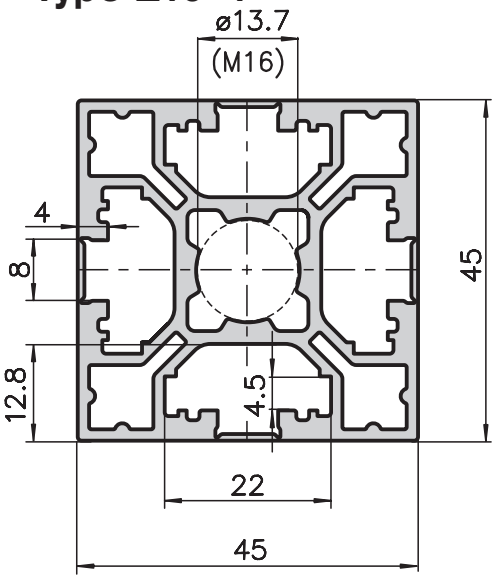

Application

The four sided softline extrusion 45x45 features an absolutely smooth surface. For this reason it is ideally suitable for clean room technology. The stable and elegant profile is easily washable. All connections are possible, thanks to the rip off slots.

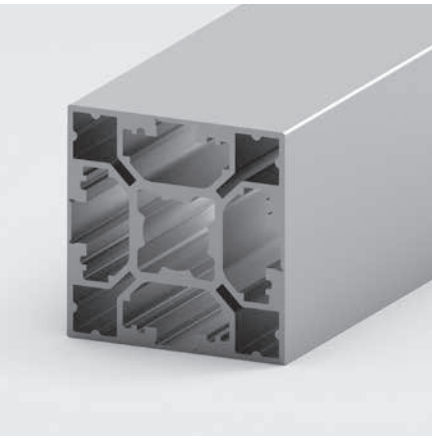

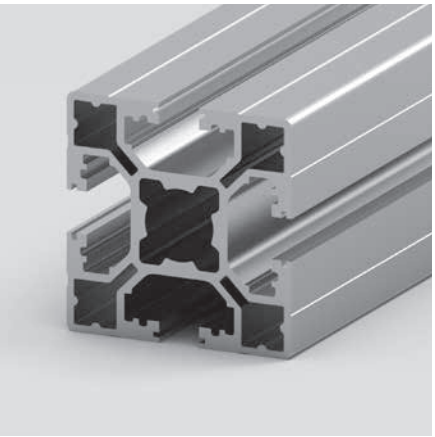

Technical data		
Ix, y	=	14.07 cm^4
Wx, y	=	6.25 cm^3
Cross-section area	=	6.75 cm^2
Weight	=	2.07 kg/m

Order data	Order number
Four sided softline extrusion 45x45	
Standard length 5000 mm	E10–1–00/5000
Four sided softline extrusion	
Cut to length	E10–1–02–02/…
Extra machining	Pages 57–61

Light extrusion 45x45 Type E02–1

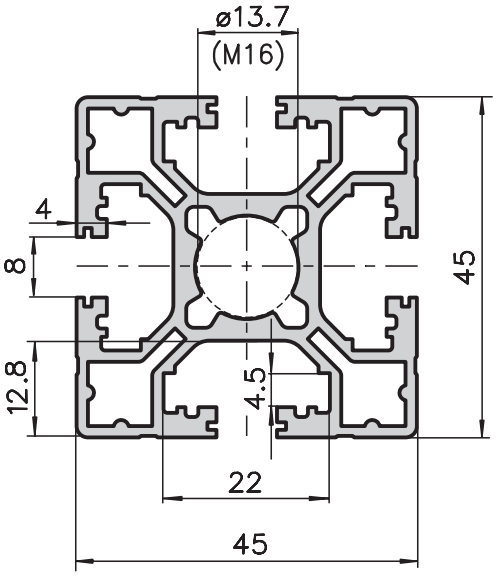

Application

With this light extrusion 45x45 you have many possible applications. The light-weight design offers a stable construction at an unbeatable price. This profile is particularly suitable for protective enclosures.

Technical data		
Ix, y	=	13.16 cm^4
Wx, y	=	5.85 cm^3
Cross-section area	=	6.37 cm^2
Weight	=	1.72 kg/m

Order data	Order number
Light extrusion 45x45	
Standard length 5000 mm	E02–1–00/5000
Light extrusion 45x45	
Cut to length	E02–1–02–02/…
Extra machining	Pages 57–61

Base extrusion 45x45 Type E01–1

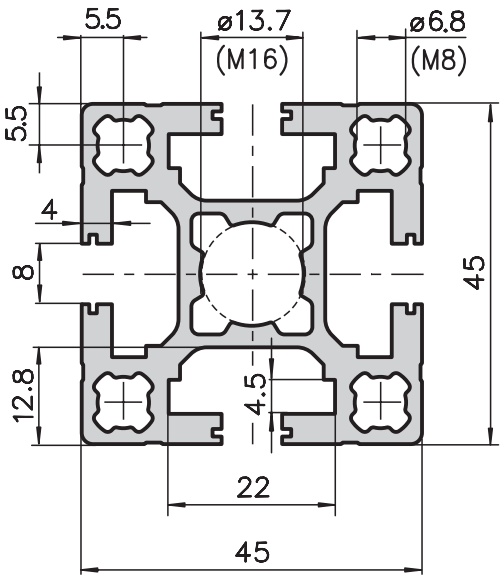

Application

The extrusions of base 45 are an ideal supplement to those of bases 20, 30, 40 and 50. The base extrusion 45x45 can be used for all types of constructions. It is exceptionally stable. It has an optimal weight and mechanical strength ratio.

Technical data		
Ix, y	=	16.12 cm^4
Wx, y	=	7.16 cm^3
Cross-section area	=	7.68 cm^2
Weight	=	2.07 kg/m

Order data	Order number
Base extrusion 45x45	
Standard length 5000 mm	E01–1–00/5000
Base extrusion 45x45	
Cut to length	E01–1–02–02/…
Extra machining	Pages 57–61

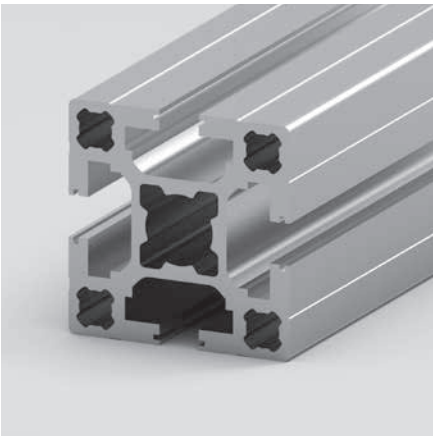

Face extrusion 45x45 Type E02–6

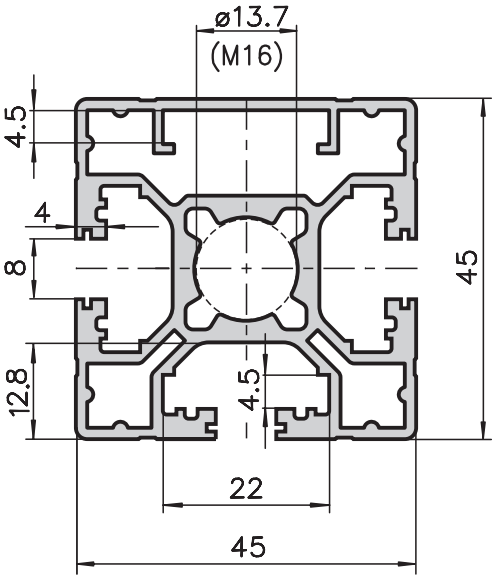

Application

As with the base extrusion, the face extrusion can also be used for a wide range of applications. They are distinguishable by having one closed side. This reduces possible dirt deposits and gives an optically smooth effect. Extrusions can also be fitted onto the closed faces.

Technical data		
Ix	=	11.76 cm^4
Iy	=	12.20 cm^4
Wx	=	5.13 cm^3
Wy	=	5.42 cm^3
Cross-section area	=	5.77 cm^2
Weight	=	1.59 kg/m

Order data	Order number
Face extrusion 45x45	
Standard length 5000 mm	E02–6–00/5000
Face extrusion 45x45	
Cut to length	E02–6–02–02/…
Extra machining	Pages 57–61

Corner extrusion 45x45 Type E02–7

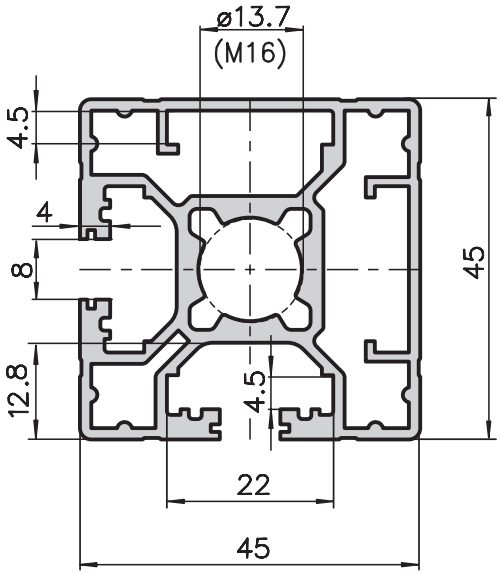

Application

Since it is closed on two sides, the corner extrusion has a compact appearance. This simplifies cleaning but it can still be used universally. Extrusions can also be fitted onto the closed faces.

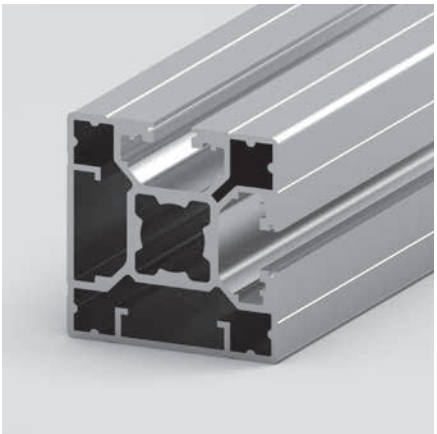

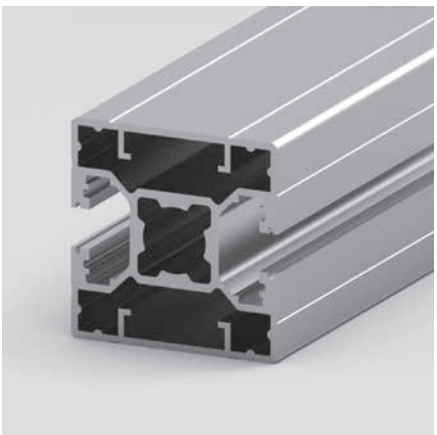

Technical data		
Ix	=	11.75 cm^4
Iy	=	11.83 cm^4
Wx	=	5.12 cm^3
Wy	=	5.16 cm^3
Cross-section area	=	5.63 cm^2
Weight	=	1.52 kg/m

Order data	Order number
Corner extrusion 45x45 Standard length 5000 mm	E02–7–00/5000
Corner extrusion 45x45 Cut to length	E02–7–02–02/…
Extra machining	Pages 57–61

Double face extrusion 45x45 Type E02–4

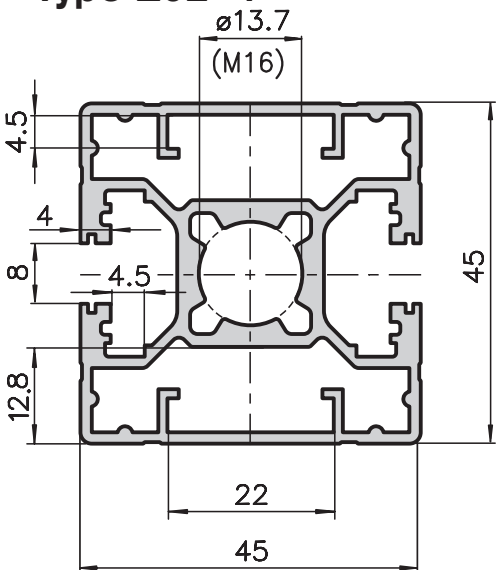

Application

The double face extrusion 45x45 lends itself for all types of cladding. The two closed profile fronts present a timeless design.

Technical data		
Ix	=	11.46 cm^4
Iy	=	12.33 cm^4
Wx	=	5.09 cm^3
Wy	=	5.48 cm^3
Cross-section area	=	5.58 cm^2
Weight	=	1.56 kg/m

Order data	Order number
Double face extrusion 45x45 Standard length 5000 mm	E02–4–00/5000
Double face extrusion 45x45 Cut to length	E02–4–02–02/…
Extra machining	Pages 57–61

Softline extrusion 45x45
Type E03–1

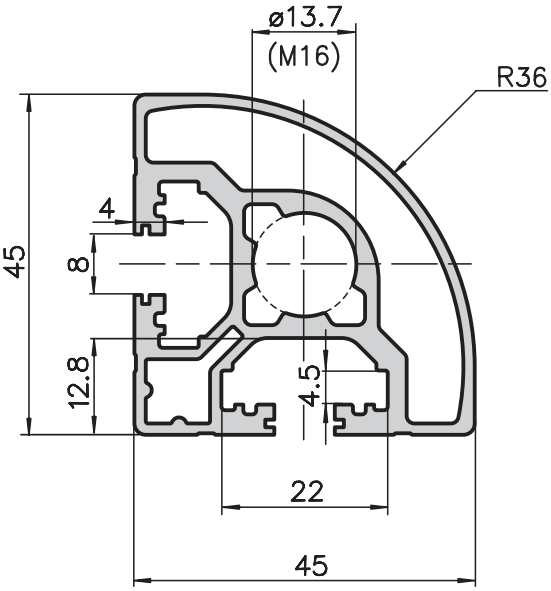

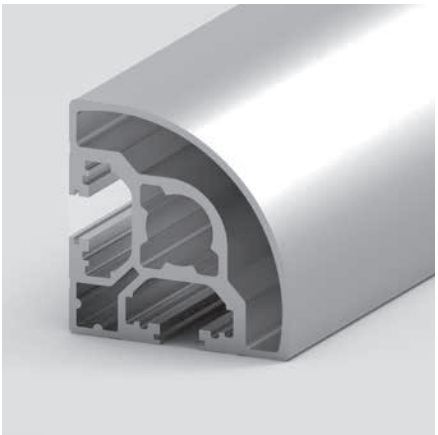

Application

The softline extrusion is suited for all applications where sharp corners are not desired. The round form has an elegant, modern and timeless effect. The profile is often used for construction of furniture and picture frames.

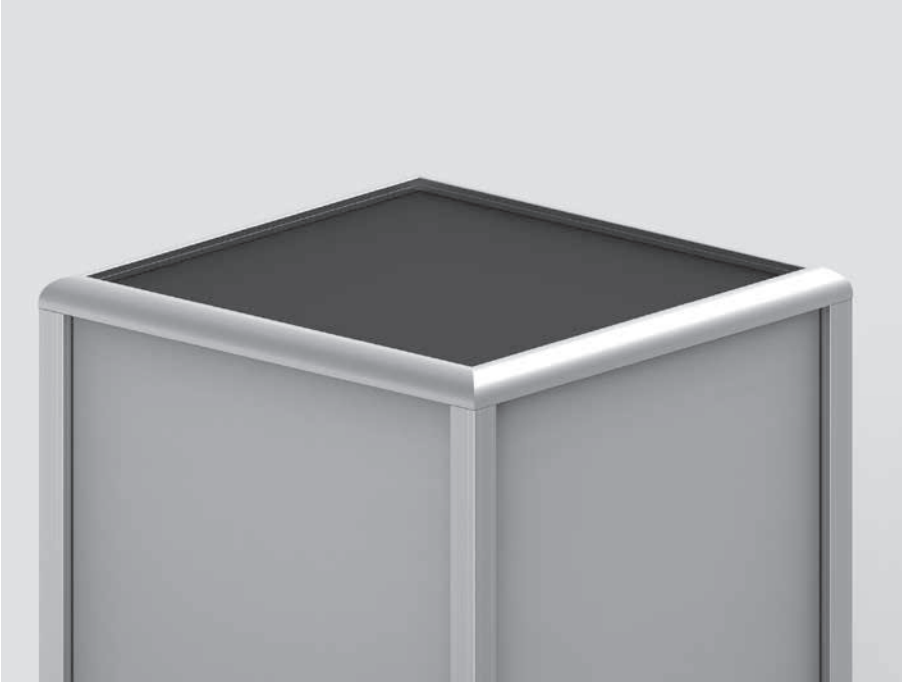

Technical data		
Ix, y	=	9.70 cm^4
Wx, y	=	3.80 cm^3
Cross-section area	=	5.35 cm^2
Weight	=	1.45 kg/m

Order data	Order number
Softline extrusion 45x45	
Standard length 5000 mm	E03–1–00/5000
Softline extrusion 45x45	
Cut to length	E03–1–02–02/…
Extra machining	Pages 57–61

Light extrusion 45x90
Type E02–3

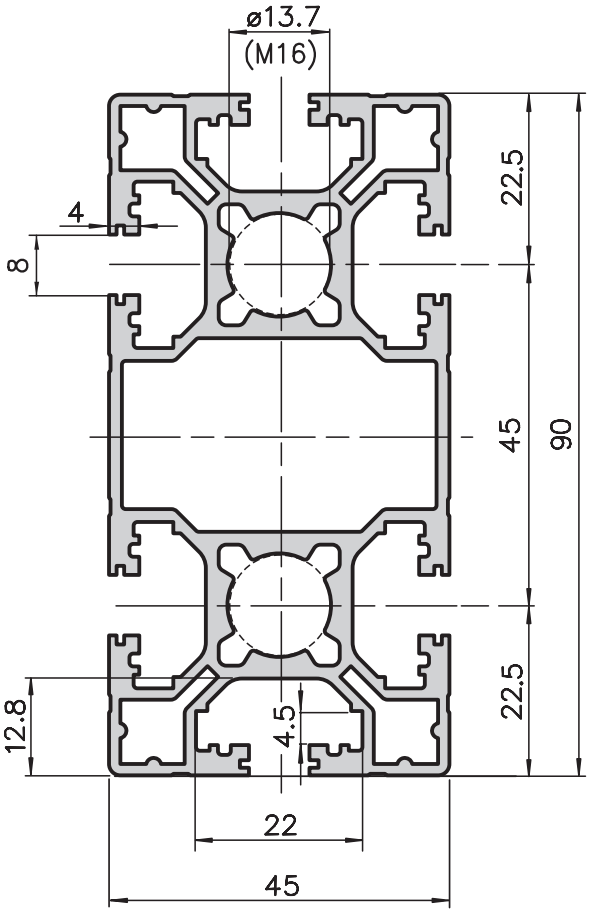

Application
This extrusion with 2 center holes increases the connection stability. The lightweight design offers a stable construction at an unbeatable price.

Technical data		
Ix	=	90.44 cm^4
Iy	=	23.62 cm^4
Wx	=	20.10 cm^3
Wy	=	10.50 cm^3
Cross-section area	=	10.54 cm^2
Weight	=	2.84 kg/m

Order data	Order number
Light extrusion 45x90 Standard length 5000 mm	E02–3–00/5000
Light extrusion 45x90 Cut to length	E02–3–02–02/…
Extra machining	Pages 57–61

Base extrusion 45x90
Type E01–3

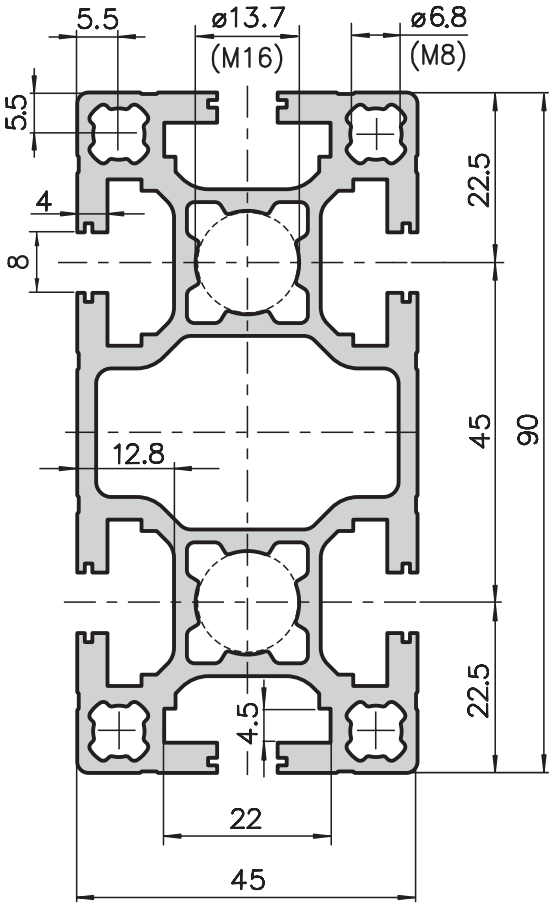

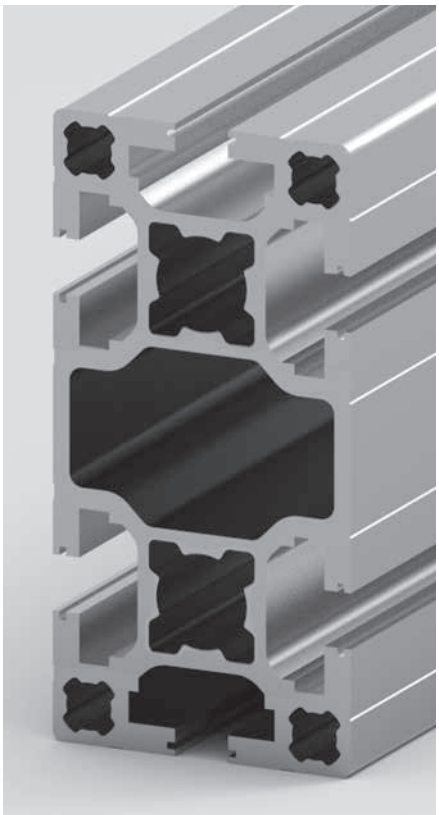

Application
This base extrusion can also be used for constructions of all types. It is exceptionally stable and its cross section makes a very wide range of applications possible.

Technical data		
Ix	=	109.54 cm^4
Iy	=	29.77 cm^4
Wx	=	24.34 cm^3
Wy	=	13.23 cm^3
Cross-section area	=	12.97 cm^2
Weight	=	3.50 kg/m

Order data	Order number
Base extrusion 45x90	
Standard length 5000 mm	E01–3–00/5000
Base extrusion 45x90	
Cut to length	E01–3–02–02/…
Extra machining	Pages 57–61

Face extrusion 45x90
Type E01–14

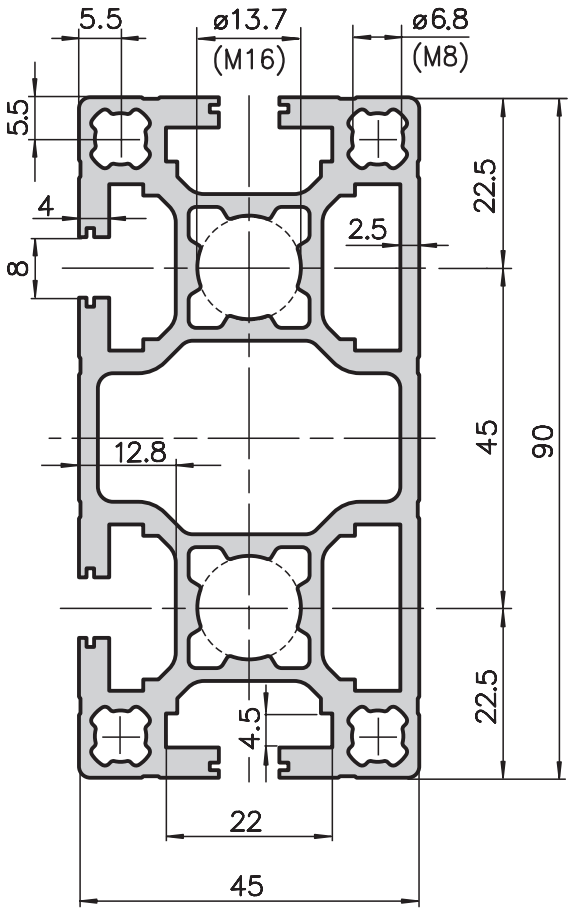

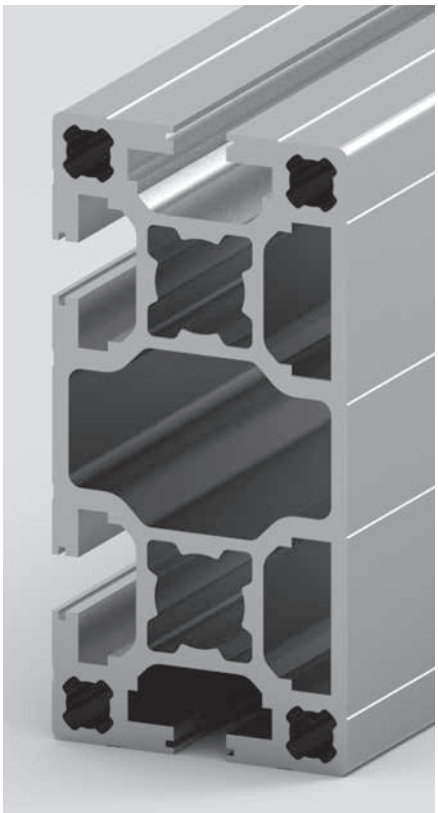

Application
The closed sides reduce possible dirt deposits and give an optically smooth effect. As with all face extrusion, this can also be used for a wide range of applications. Extrusions can also be fitted onto the closed faces.

Technical data		
Ix	=	109.45 cm^4
Iy	=	30.23 cm^4
Wx	=	24.32 cm^3
Wy	=	13.38 cm^3
Cross-section area	=	12.99 cm^2
Weight	=	3.50 kg/m

Order data	Order number
Face extrusion 45x90 Standard length 5000 mm	E01–14–00/5000
Face extrusion 45x90 Cut to length	E01–14–02–02/…
Extra machining	Pages 57–61

Corner extrusion 45x90
Type E02–2

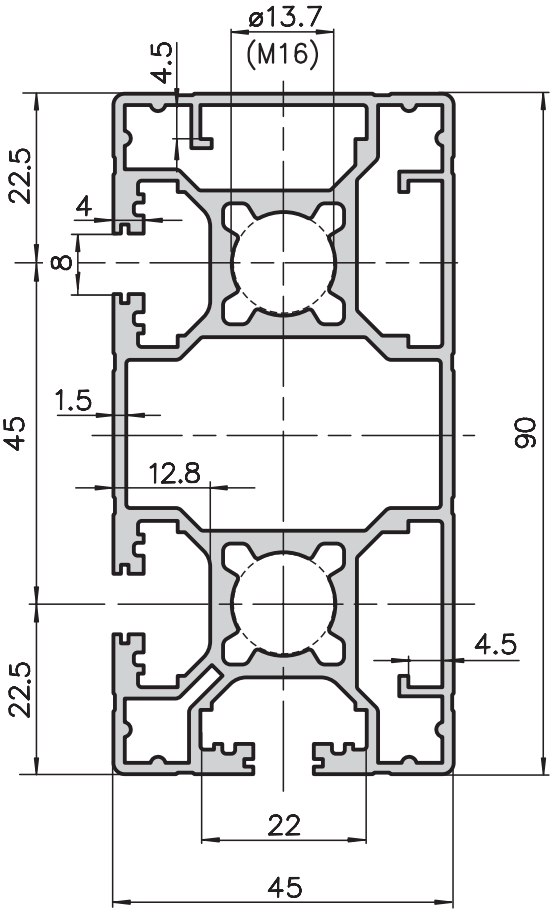

Application
The corner extrusion is suitable for formwork of all types. The closed sides simplify cleaning. Extrusions can also be fitted onto the closed faces.

Technical data		
Ix	=	82.76 cm^4
Iy	=	22.31 cm^4
Wx	=	18.26 cm^3
Wy	=	9.79 cm^3
Cross-section area	=	9.80 cm^2
Weight	=	2.65 kg/m

Order data	Order number
Corner extrusion 45x90 Standard length 5000 mm	E02–2–00/5000
Corner extrusion 45x90 Cut to length	E02–2–02–02/…
Extra machining	Pages 57–61

Beam extrusion 45x135
Type E01–19

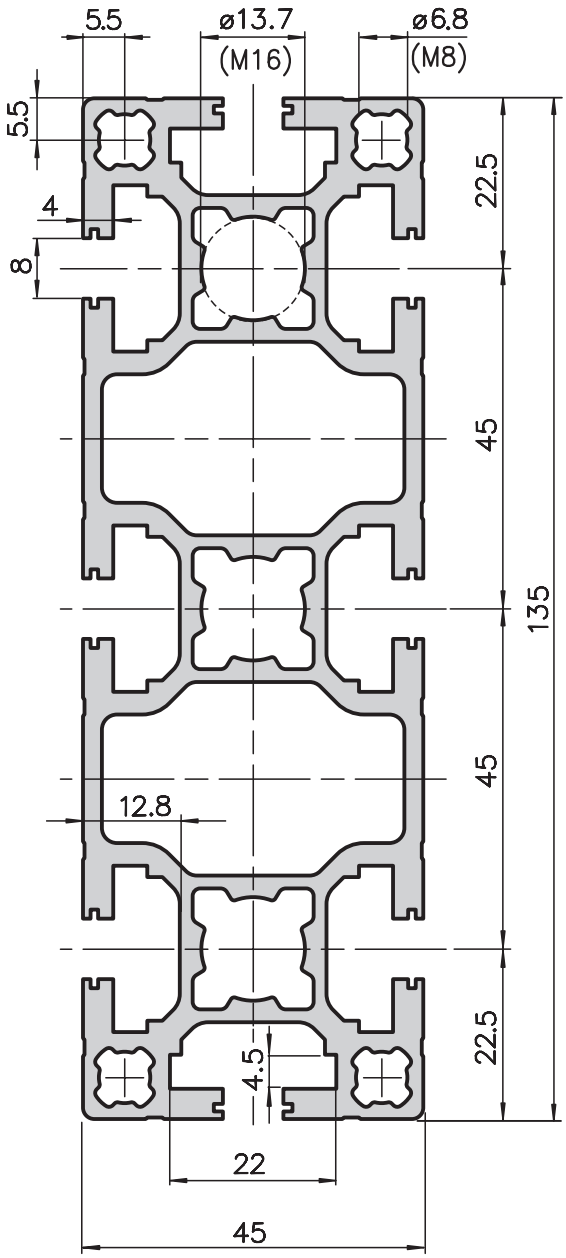

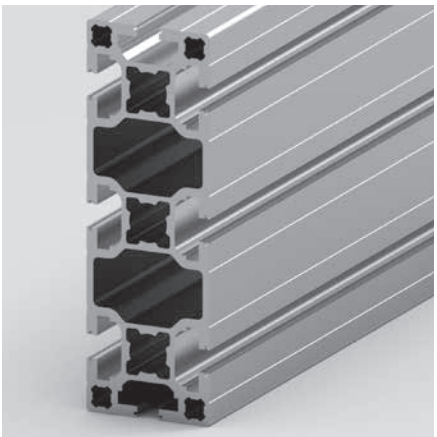

Application

This beam extrusion is mainly used for high loads, thanks to its excellent mechanical strength properties.

Technical data		
Ix	=	334.22 cm^4
Iy	=	43.41 cm^4
Wx	=	49.51 cm^3
Wy	=	19.30 cm^3
Cross-section area	=	18.25 cm^2
Weight	=	4.93 kg/m

Order data	Order number
Beam extrusion 45x135 Standard length 6000 mm	E01–19–01/6000
Beam extrusion 45x135 Cut to length	E01–19–02–02/…
Extra machining	Pages 57–61

Beam extrusion 45x180
Type E01–16

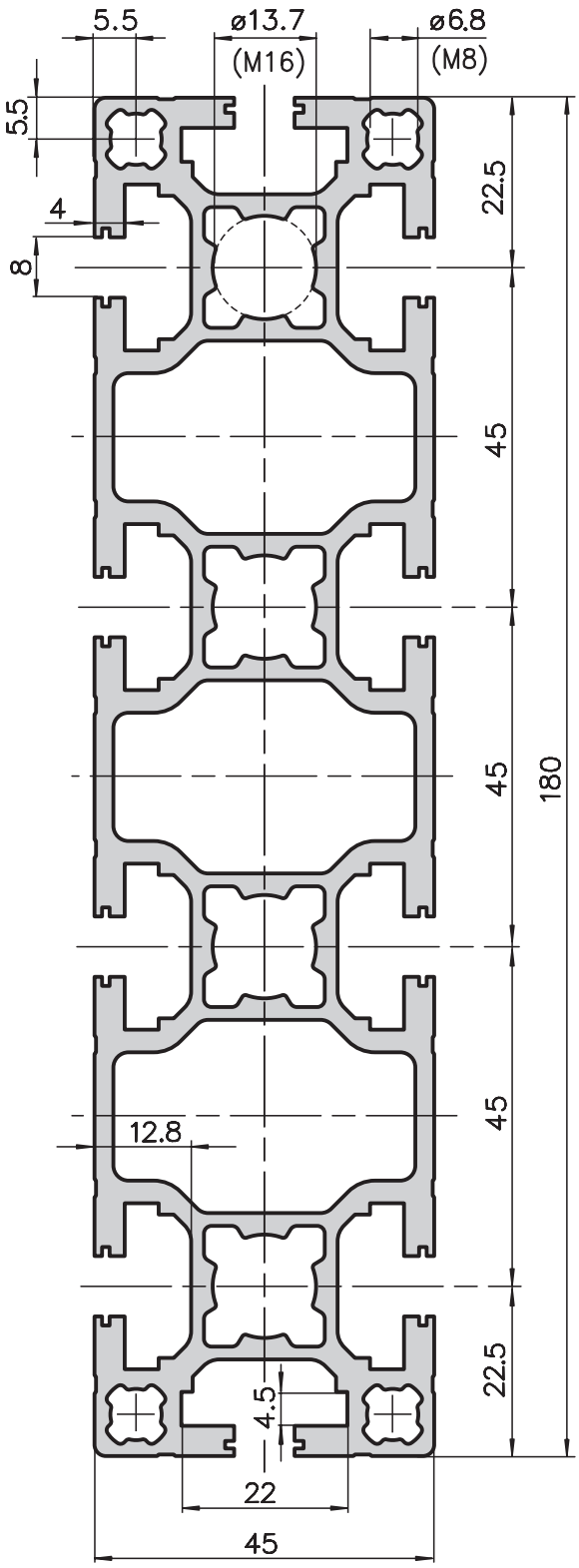

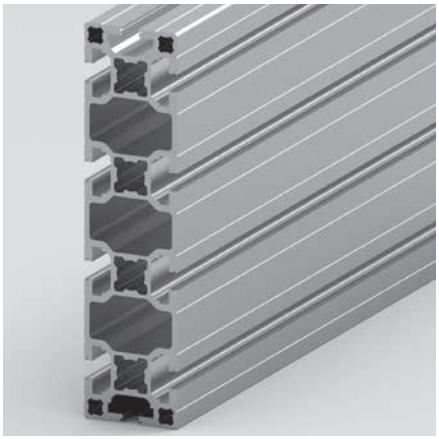

Application
A extrusion for applications with very high load and span widths. Robust large structures can be built. It is also the perfect solution for large portals and stable cross beams.

Technical data		
Ix	=	743.74 cm^4
Iy	=	57.06 cm^4
Wx	=	82.64 cm^3
Wy	=	25.36 cm^3
Cross-section area	=	23.54 cm^2
Weight	=	6.36 kg/m

Order data	Order number
Beam extrusion 45x180 Standard length 6000 mm	E01–16–01/6000
Beam extrusion 45x180 Cut to length	E01–16–02–02/…
Extra machining	Pages 57–61

Light extrusion 90x90
Type E02–5

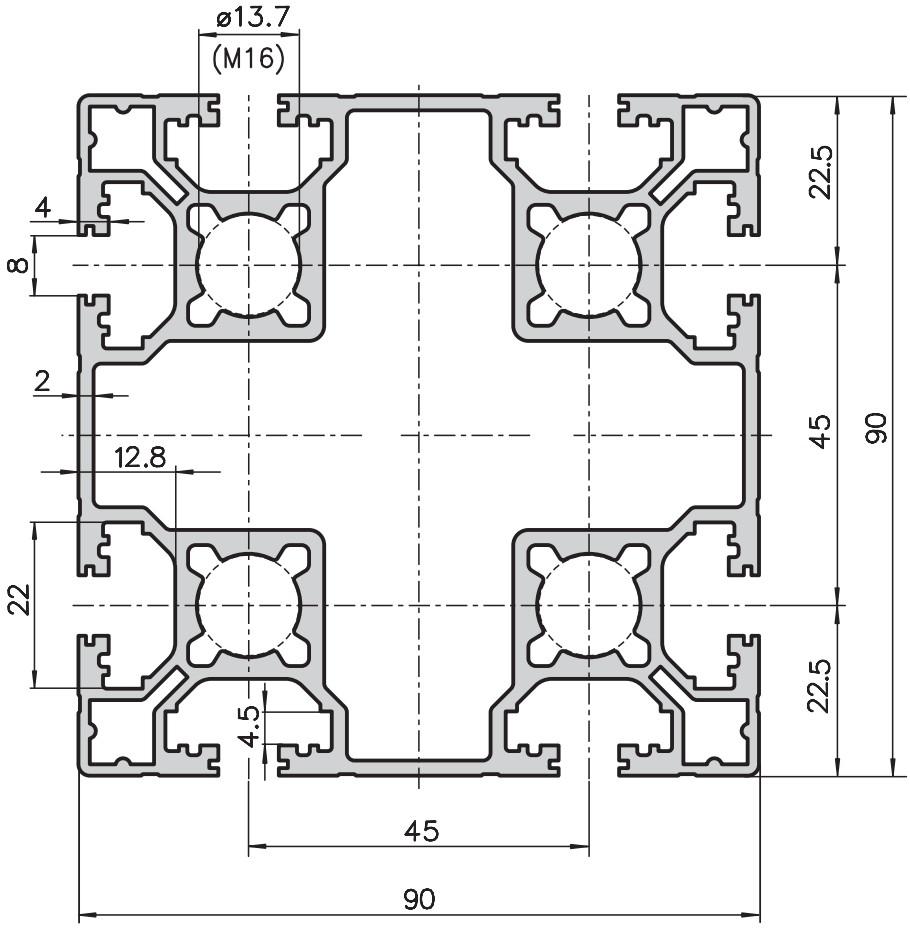

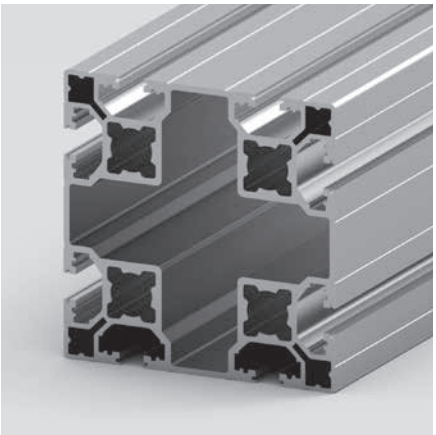

Application

The light extrusion 90x90 main feature is its optimal torsional stiffness. The lightweight design offers a stable construction at an unbeatable price.

Technical data		
Ix, y	=	160.09 cm^4
Wx, y	=	35.58 cm^3
Cross-section area	=	17.53 cm^2
Weight	=	4.73 kg/m

Order data	Order number
Light extrusion 90x90	
Standard length 6000 mm	E02–5–01/6000
Light extrusion 90x90	
Cut to length	E02–5–02–02/…
Extra machining	Pages 57–61

Base extrusion 90x90
Type E01–4

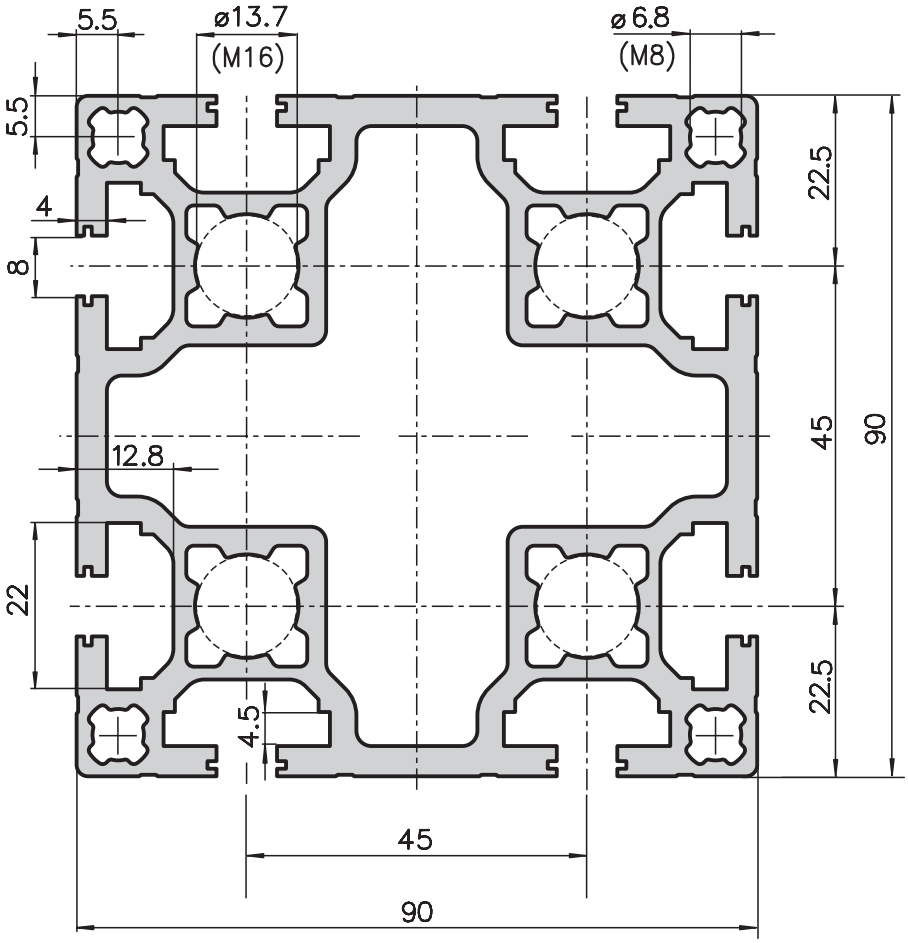

Application
The qualities of this universal extrusion are its high strength and torsional stiffness. These make it widely used in mechanical and plant engineering. Let your ideas run free.

Technical data		
Ix, y	=	205.78 cm^4
Wx, y	=	45.73 cm^3
Cross-section area	=	22.50 cm^2
Weight	=	6.08 kg/m

Order data	Order number
Base extrusion 90x90 Standard length 6000 mm	E01–4–01/6000
Base extrusion 90x90 Cut to length	E01–4–02–02/…
Extra machining	Pages 57–61

Beam extrusion 90x135
Type E01–13

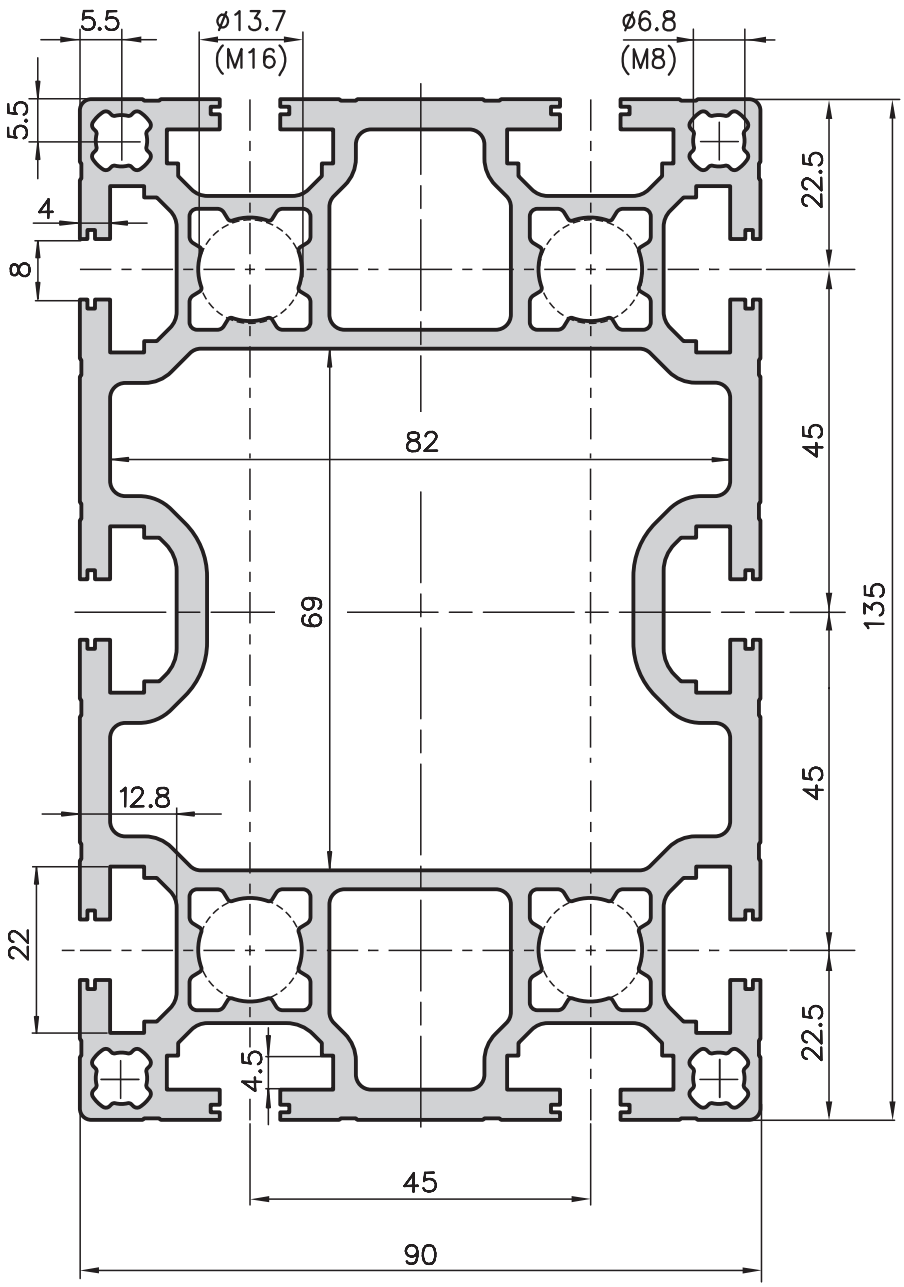

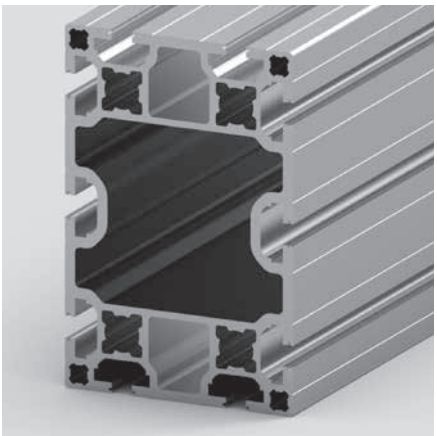

Application

This extrusion can be used for a wide range of applications. Its optimal structural stress values make it perfect for general constructions with high loads.

Technical data		
Ix	=	618.00 cm^4
Iy	=	300.57 cm^4
Wx	=	98.56 cm^3
Wy	=	66.79 cm^3
Cross-section area	=	30.06 cm^2
Weight	=	8.10 kg/m

Order data	Order number
Beam extrusion 90x135 Standard length 6000 mm	E01–13–01/6000
Beam extrusion 90x135 Cut to length	E01–13–02–02/…
Extra machining	Pages 57–61

Beam extrusion 90x180
Type E01–5

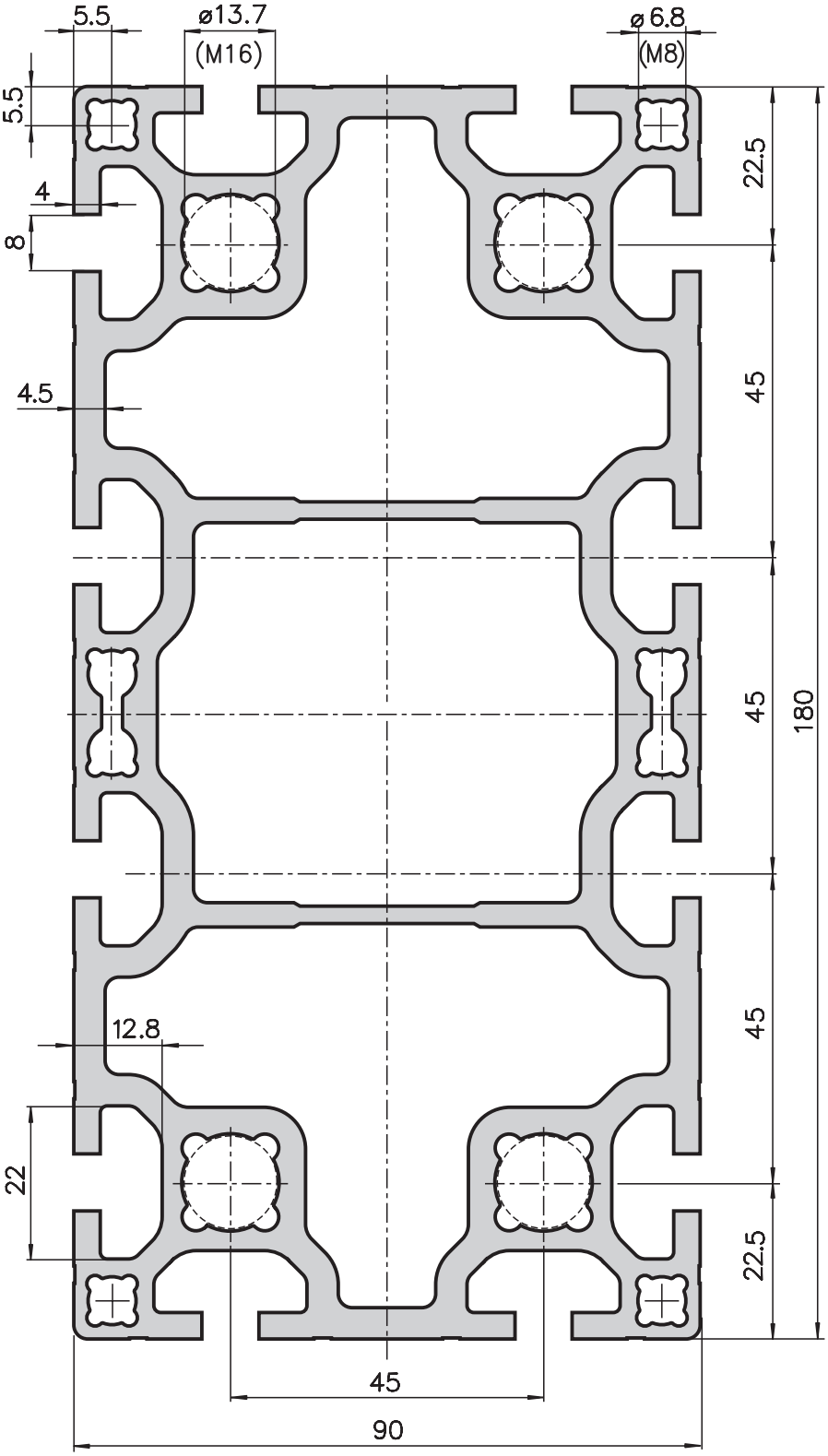

Application

A heavy duty extrusion for portal construction and structures with large self supporting lengths. Ideally suited for all large structures.

Technical data		
Ix	=	1303.61 cm^4
Iy	=	417.14 cm^4
Wx	=	144.85 cm^3
Wy	=	92.69 cm^3
Cross-section area	=	39.58 cm^2
Weight	=	10.88 kg/m

Order data	Order number
Beam extrusion 90x180 Standard length 6000 mm	E01–5–01/6000
Beam extrusion 90x180 Cut to length	E01–5–02–02/…
Extra machining	Pages 57–61

Four sided softline extrusion 40x40 type C10–0

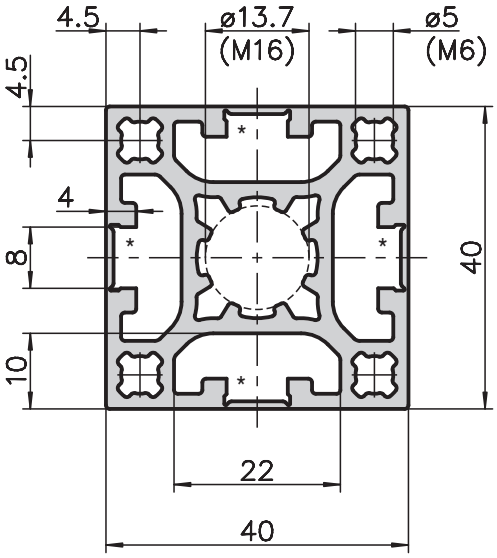

* Rip off slot

Application

These extrusions are used in clean-room applications, in the food industry or anywhere where no open slots are to be found and where smooth surfaces are desired. Thanks to the rip off slots, all connection options are guaranteed.

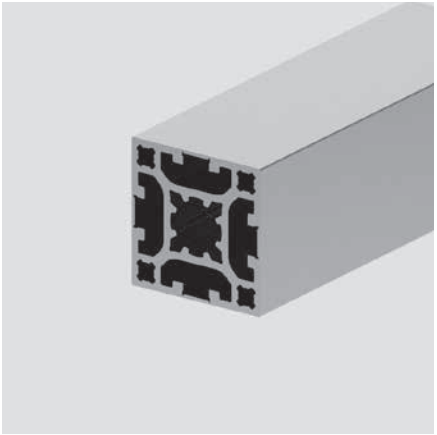

Technical data		
Ix,y	=	9.6 cm^4
Wx,y	=	4.75 cm^3
Cross-section area	=	5.97 cm^2
Weight	=	1.6 kg/m

Order data	Order number
Four sided softline extrusion 40x40	
Standard length 5000 mm	C10–0–00/5000
Four sided softline extrusion 40x40	
Cut to length	C10–0–02–02/…
Extra machining	Pages 57–61

Four sided softline extrusion 40x80 type C10–3

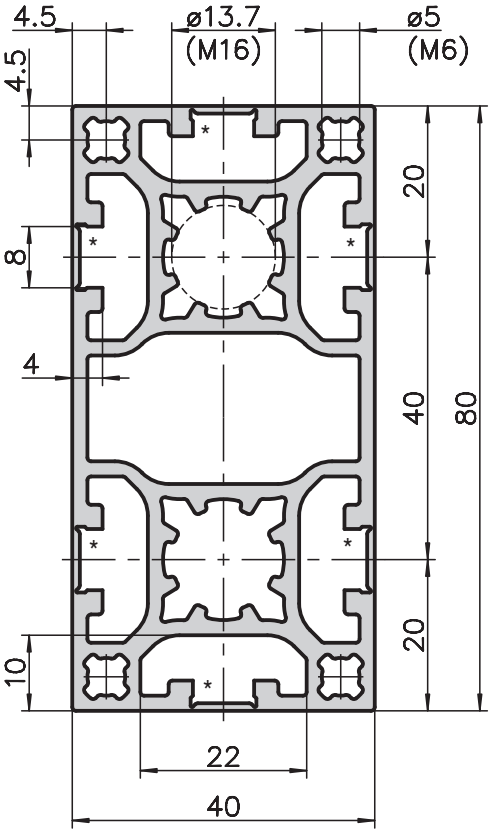

Application

Same intended use as C10–0 but with greater stability because of the dimension 40x80mm.

Technical data		
Ix	=	69.73 cm^4
Iy	=	18.52 cm^4
Wx	=	17.43 cm^3
Wy	=	9.26 cm^3
Cross-section area	=	10.34 cm^2
Weight	=	2.8 kg/m

Order data	Order number
Four sided softline extrusion 40x80	
Standard length 5000 mm	C10–3–00/5000
Four sided softline extrusion 40x80	
Cut to length	C10–3–02–02/…
Extra machining	Pages 57–61

Four sided softline extrusion 80x80 type C10–4

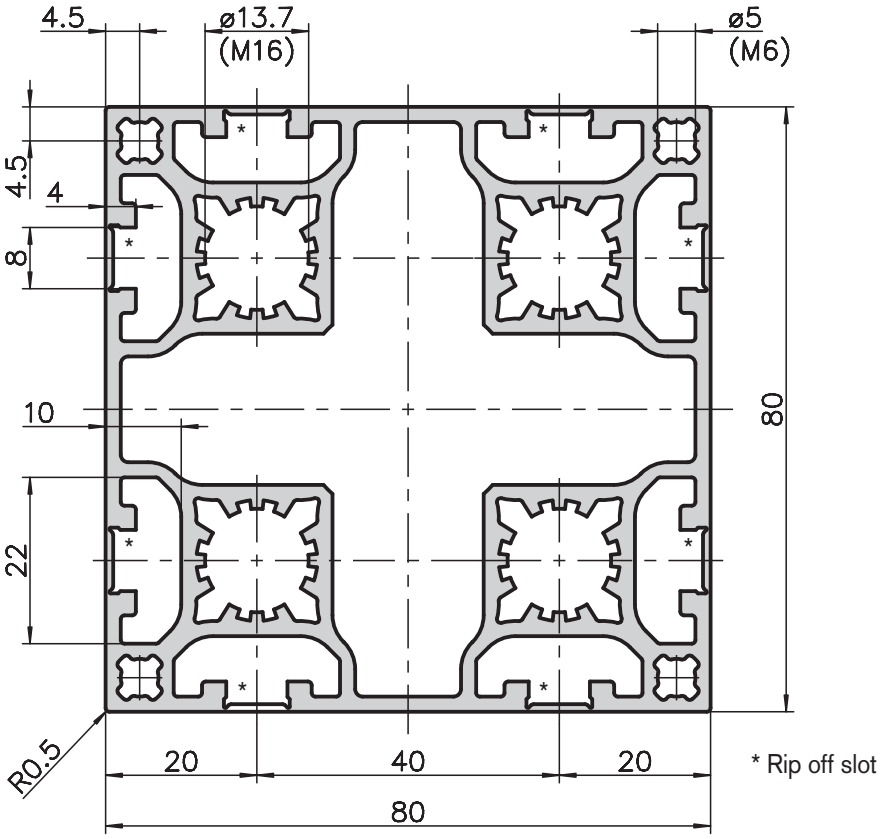

Application

This lightweight, fully closed extrusion with a dimension 80x80, together with the 40x40 and 40x80 of the softline range of extrusions, is used in clean-room applications and for aesthetic applications where no slots are desired. The slots can be easily opened thanks to the predetermined breaking point. The proven KANYA connection technology can be easily used. Closing slots afterwards is inefficient and expensive! Partial opening of slots does not pose a problem, thereby allowing panels to be inserted into the slots of constructions.

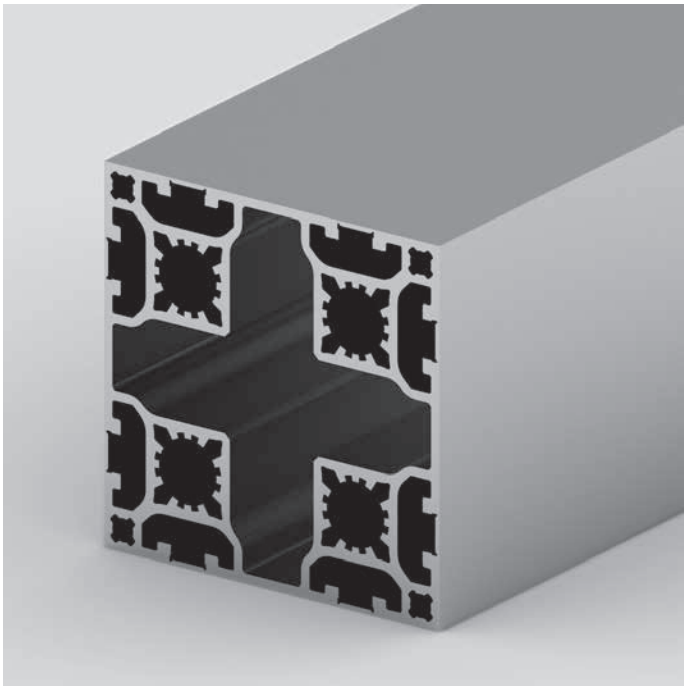

Technical data		
Ix,y	=	119.40 cm^4
Wx,y	=	29.85 cm^3
Cross-section area	=	16.36 cm^2
Weight	=	4.39 kg/m

Order data	Order number
Softline extrusion 80x40 Standard length 5000 mm	C10–4–00/5000
Softline extrusion 80x80 Cut to length	C10–4–02–02/…
Extra machining	Pages 57–61

40x40 super lightweight extrusion type C03–1

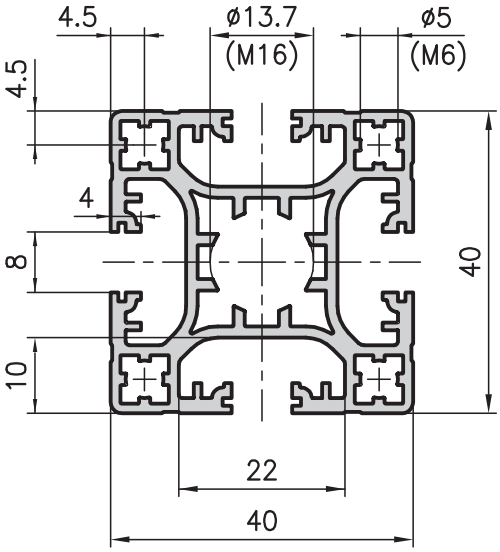

Technical data

Ix,y	=	8.20 cm^4
Wx,y	=	4.10 cm^3
Cross-section area	=	4.90 cm^2
Weight	=	1.3 kg/m

Order data	Order number
40x40 super lightweight extrusion Standard length 5000 mm	C03–1–00/5000
40x40 super lightweight extrusion Cut to length	C03–1–02–02/...
Extra machining	Pages 57–61

Application

These lightweight extrusions help to keep costs down! They can be used to create lightweight designs with excellent load-bearing capabilities.

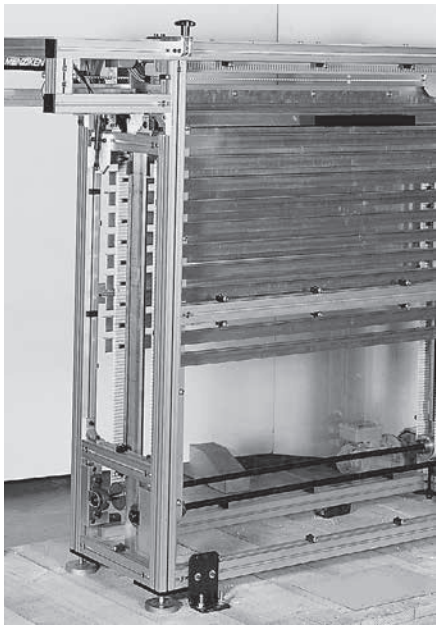

40x40 lightweight extrusion type C02–1

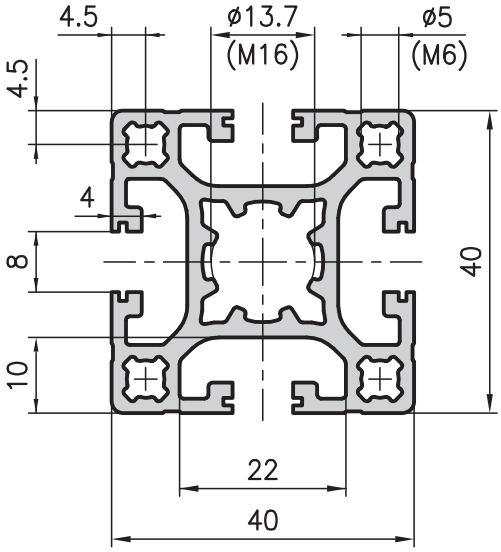

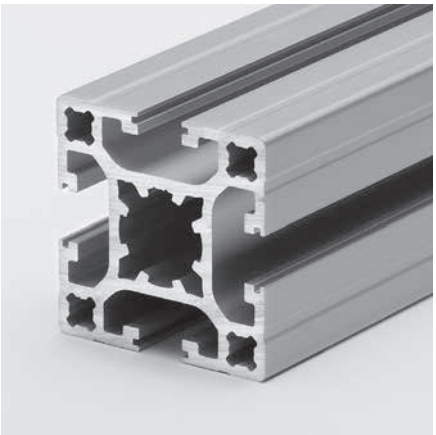

Technical data

Ix,y	=	9.35 cm^4
Wx,y	=	4.67 cm^3
Cross-section area	=	5.70 cm^2
Weight	=	1.5 kg/m

Order data	Order number
40x40 lightweight extrusion Standard length 5000 mm	C02–1–00/5000
40x40 lightweight extrusion Cut to length	C02–1–02–02/...
Extra machining	Pages 57–61

40x40 base extrusion type C01–1

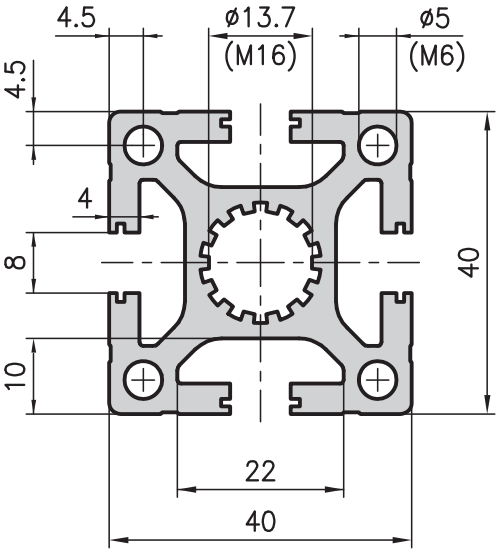

40x40 face extrusion type C01–8

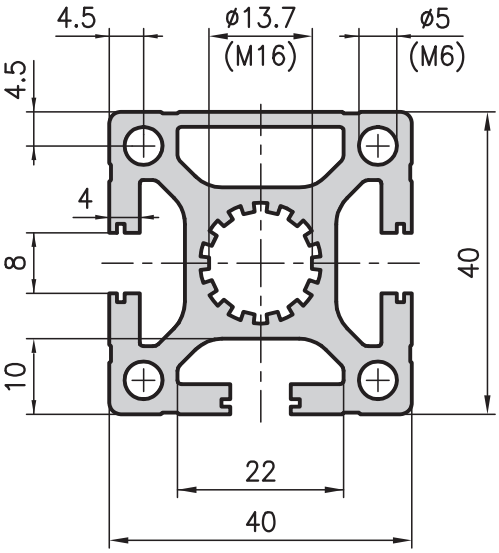

Application

These versatile extrusions can be used for all kinds of structures. With their 40 mm base, they complement extrusions with 20, 30 and 50 mm bases perfectly. The base extrusion itself is extraordinarily sturdy and is hard to beat in terms of value for money.

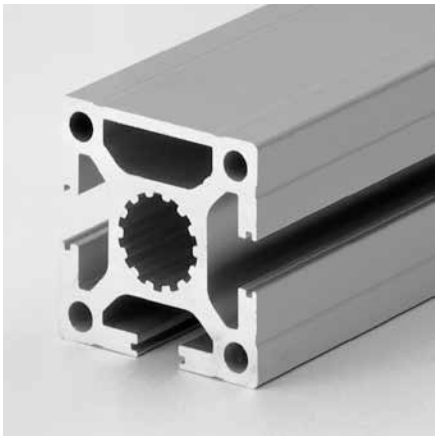

Technical data		
Ix,y	=	11.70 cm^4
Wx,y	=	5.75 cm^3
Cross-section area	=	7.29 cm^2
Weight	=	2.0 kg/m

Order data	Order number
40x40 base extrusion Standard length 5000 mm	C01–1–00/5000
40x40 base extrusion Cut to length	C01–1–02–02/…
Extra machining	Pages 57–61

Technical data		
Ix	=	11.66 cm^4
Iy	=	11.67 cm^4
Wx	=	5.78 cm^3
Wy	=	5.83 cm^3
Cross-section area	=	7.30 cm^2
Weight	=	2.0 kg/m

Order data	Order number
40x40 face extrusion Standard length 5000 mm	C01–8–00/5000
40x40 face extrusion Cut to length	C01–8–02–02/…
Extra machining	Pages 57–61

40x40 corner extrusion type C01–7

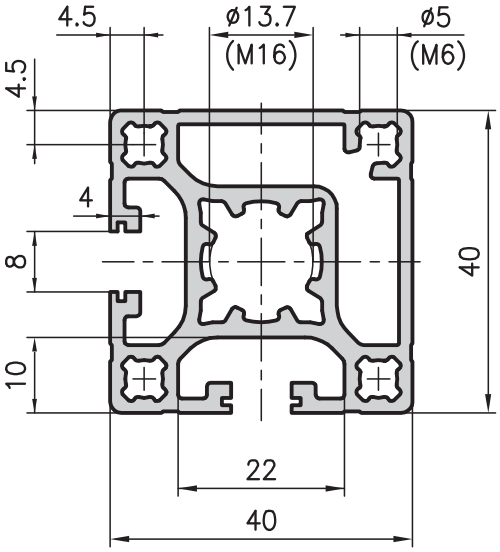

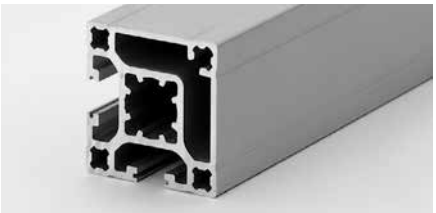

Application

Partially closed extrusions are particularly attractive in design, trap less dirt and can be used for a wide range of applications.

Technical data		
Ix,y	=	9.21 cm^4
Wx,y	=	4.53 cm^3
Cross-section area	=	5.56 cm^2
Weight	=	1.5 kg/m

Order data	Order number
40x40 corner extrusion Standard length 5000 mm	C01–7–00/5000
40x40 corner extrusion Cut to length	C01–7–02–02/…
Extra machining	Pages 57–61

40x40 double face extrusion type C02–4

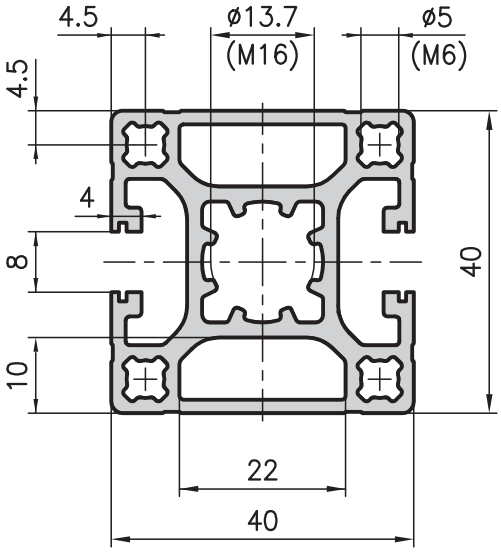

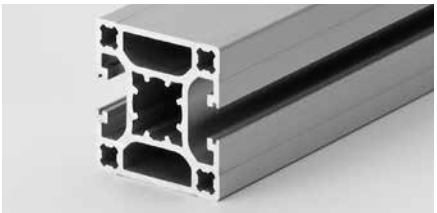

Application

For all types of enclosure, as well as for structures with extrusion faces which are mainly closed and for applications with an attractive design.

Technical data		
Ix	=	9.56 cm^4
Iy	=	9.21 cm^4
Wx	=	4.78 cm^3
Wy	=	4.60 cm^3
Cross-section area	=	5.69 cm^2
Weight	=	1.5 kg/m

Order data	Order number
40x40 double face extrusion Standard length 5000 mm	C02–4–00/5000
40x40 double face extrusion Cut to length	C02–4–02–02/…
Extra machining	Pages 57–61

Face panel extrusion 40x40 type C02–2

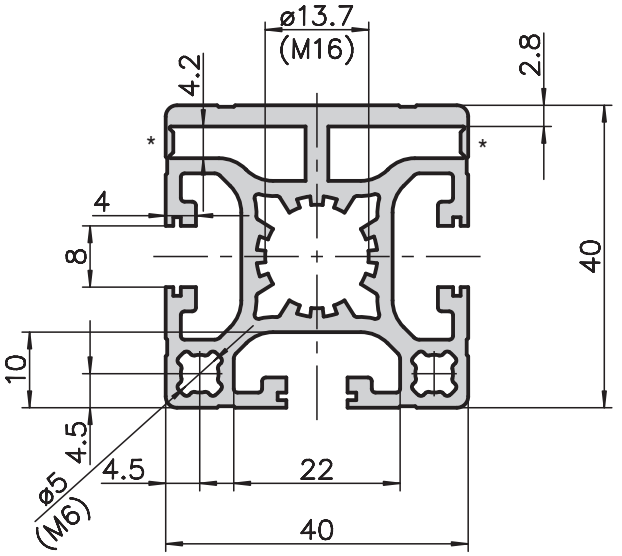

* Rip off slot

Corner panel extrusion 40x40 type C02–7

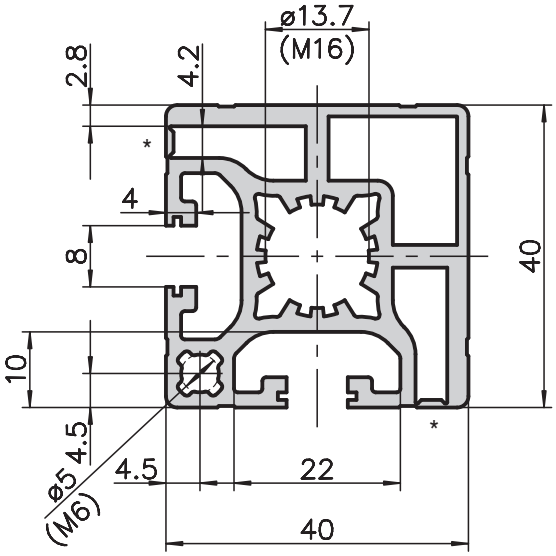

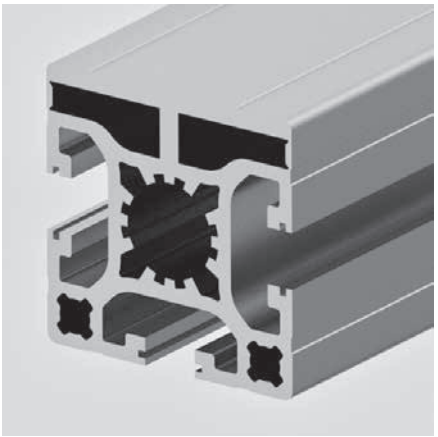

Application

Face and corner panel extrusions have rip off slots. This allows you to insert panels in the face extension. The associated surround extrusion C39–63 can be found on Page 182.

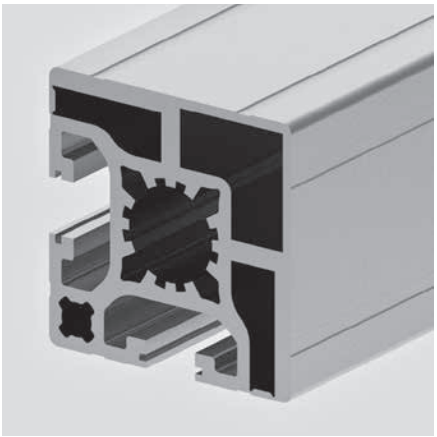

Technical data		
Ix	=	9.78 cm^4
Iy	=	8.77 cm^4
Wx	=	4.59 cm^3
Wy	=	4.39 cm^3
Cross-section area	=	6.08 cm^2
Weight	=	1.64 kg/m

Order data	Order number
Face panel extrusion 40x40 Standard length 5000 mm	C02–2–00/5000
Face panel extrusion 40x40 Cut to length	C02–2–02–02/…
Extra machining	Pages 57–61

Technical data		
Ix,y	=	9.25 cm^4
Wx,y	=	4.58 cm^3
Cross-section area	=	5.89 cm^2
Weight	=	1.6 kg/m

Order data	Order number
Corner panel extrusion 40x40 Standard length 5000 mm	C02–7–00/5000
Corner panel extrusion 40x40 Cut to length	C02–7–02–02/…
Extra machining	Pages 57–61

45° angle extrusion type C04–4

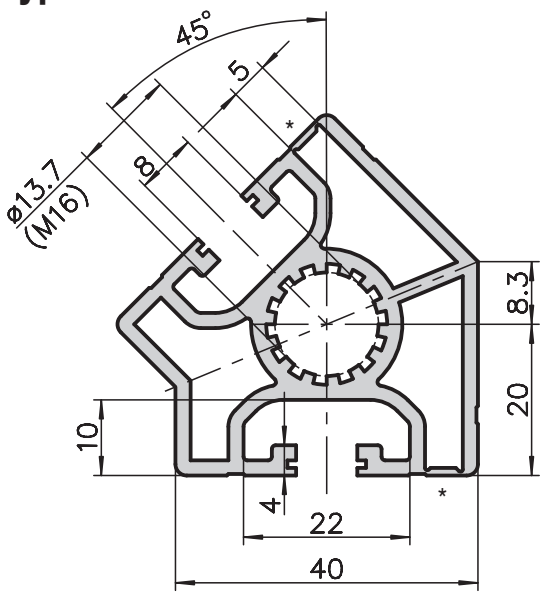

* Rip off slot

40x45° angle extrusion type C02–8

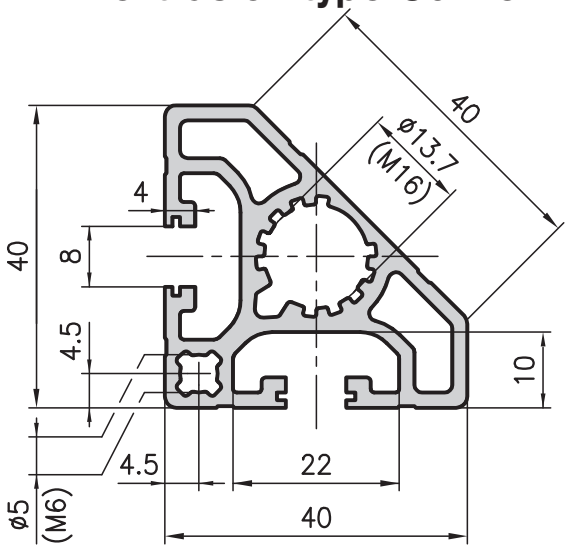

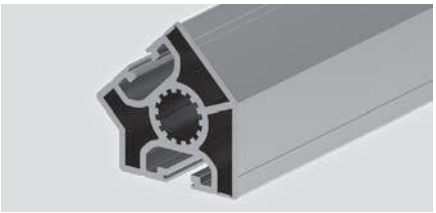

Application

Used for mitered constructions or as angle element for 45° connections.

Technical data

Ix	=	8.46 cm^4
Iy	=	9.11 cm^4
Wx	=	3.01 cm^3
Wy	=	3.44 cm^3
Cross-section area	=	5.52 cm^2
Weight	=	1.49 kg/m

Order data	Order number
45° angle extrusion Standard length 5000 mm	C04–4–00/5000
45° angle extrusion Cut to length	C04–4–02–02/…
Extra machining	Pages 57–61

Application

The C02–8 type angle extrusion allows you to create attractive, soft contours and has the versatility to be used for all sorts of structural designs.

Technical data

Ix,y	=	6.30 cm^4
Wx,y	=	2.70 cm^3
Cross-section area	=	4.57 cm^2
Weight	=	1.2 kg/m

Order data	Order number
40x45° angle extrusion Standard length 5000 mm	C02–8–00/5000
40x45° angle extrusion Cut to length	C02–8–02–02/…
Extra machining	Pages 57–61

Softline extrusion 40x40 type C03–8

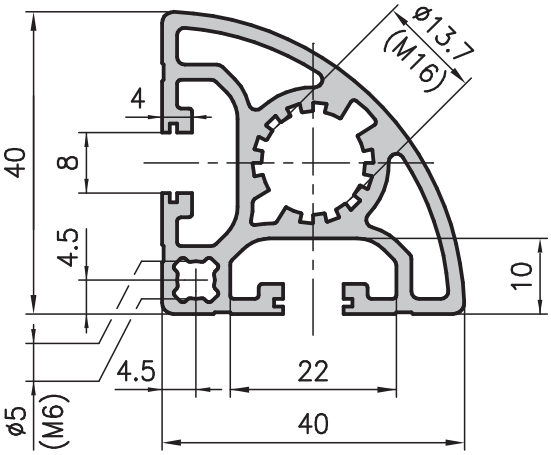

Application
Worktables, furniture, display cabinets, picture frames and applications where sharp corners must be avoided

Technical data		
Ix,y	=	6.70 cm^4
Wx,y	=	2.97 cm^3
Cross-section area	=	4.90 cm^2
Weight	=	1.3 kg/m

Order data	Order number
Softline extrusion 40x40 Standard length 5000 mm	C03–8–00/5000
Softline extrusion 40x40 Cut to length	C03–8–02–02/…
Extra machining	Pages 57–61

40x80 light extrusion type C02–3

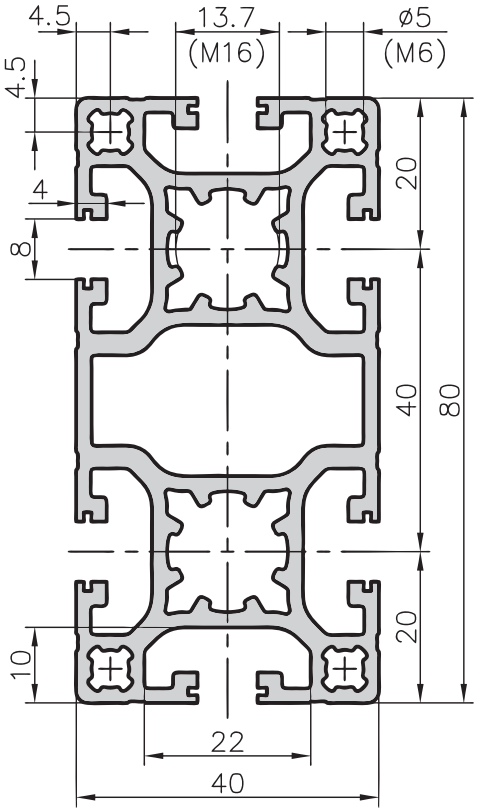

Application

These extrusions can be used to hold liquids and gases, to bear loads, to take threads and lots more. They can be a perfect solution to very specific problems. They can be combined with 20, 30 and 50 series extrusions, which means that you can genuinely build on this design of extrusion.

Technical data		
Ix	=	64.90 cm^4
Iy	=	17.70 cm^4
Wx	=	16.23 cm^3
Wy	=	8.85 cm^3
Cross-section area	=	10.20 cm^2
Weight	=	2.8 kg/m

Order data	Order number
40x80 light extrusion Standard length 5000 mm	C02–3–00/5000
40x80 light extrusion Cut to length	C02–3–02–02/…
Extra machining	Pages 57–61

40x80 base extrusion type C01–3

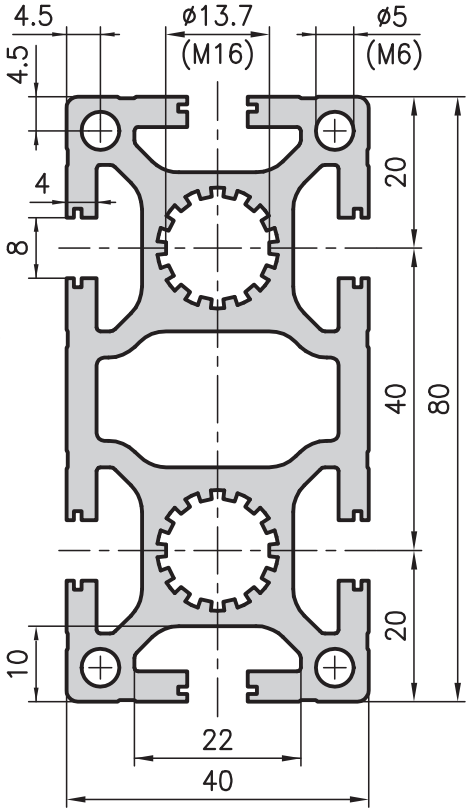

Technical data		
Ix	=	81.95 cm^4
Iy	=	22.74 cm^4
Wx	=	20.49 cm^3
Wy	=	11.37 cm^3
Cross-section area	=	13.50 cm^2
Weight	=	3.7 kg/m

Order data	Order number
40x80 base extrusion Standard length 5000 mm	C01–3–00/5000
40x80 base extrusion Cut to length	C01–3–02–02/…
Extra machining	Pages 57–61

40x80 face extrusion type C01–5

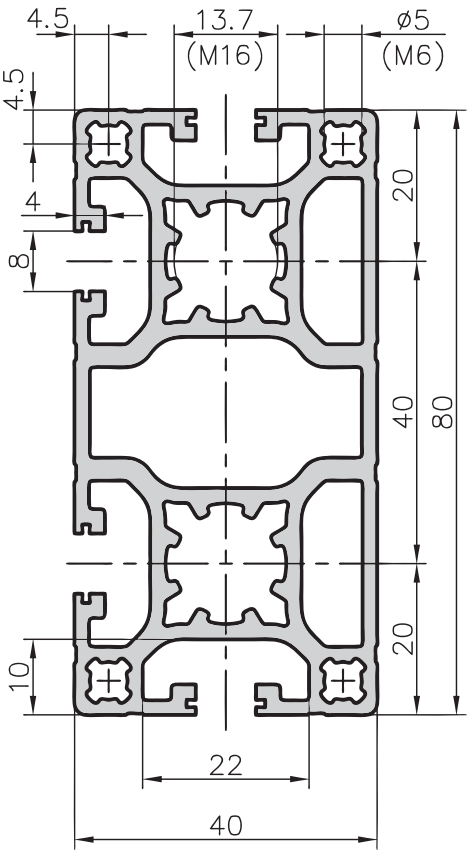

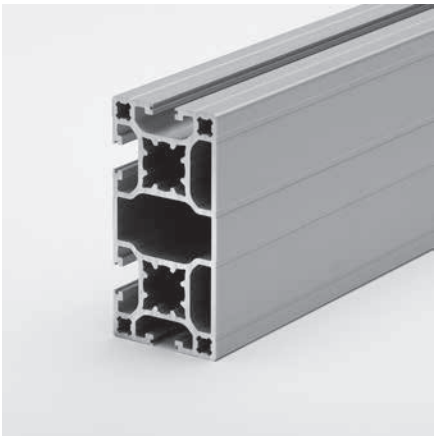

Application

Like all partially closed extrusions, this item is ideal if you want to keep your structure as clean as possible.

Technical data		
Ix	=	64.40 cm^4
Iy	=	17.20 cm^4
Wx	=	16.10 cm^3
Wy	=	8.60 cm^3
Cross-section area	=	9.76 cm^2
Weight	=	2.6 kg/m

Order data	Order number
40x80 face extrusion Standard length 5000 mm	C01–5–00/5000
40x80 face extrusion Cut to length	C01–5–02–02/…
Extra machining	Pages 57–61

40x120 light extrusion type C03–9

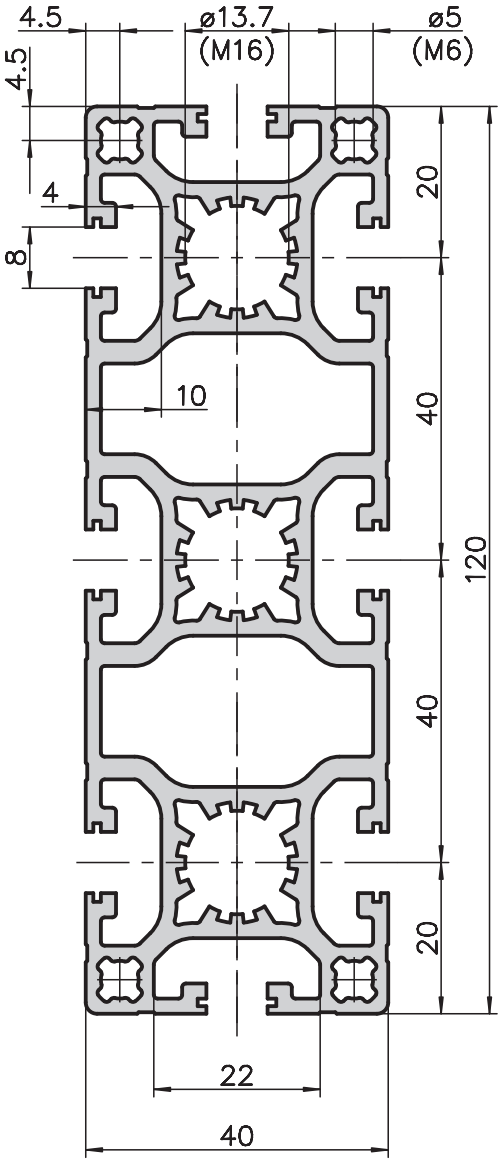

Application

The light extrusion 40x120 with the rip off slots for use with the new connecting technology, PVS®-EASY, is a cost effective cross beam.

Technical data		
Ix	=	203.49 cm^4
Iy	=	25.75 cm^4
Wx	=	33.91 cm^3
Wy	=	12.87 cm^3
Cross-section area	=	14.77 cm^2
Weight	=	3.99 kg/m

Order data	Order number
40x120 light extrusion Standard length 5000 mm	C03–9–00/5000
40x120 light extrusion Cut to length	C03–9–02–02/…
Extra machining	Pages 57–61

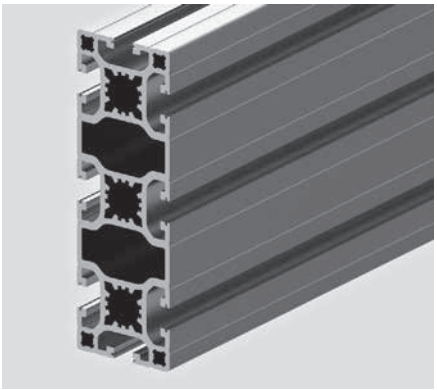

40x120 beam extrusion type C01–9

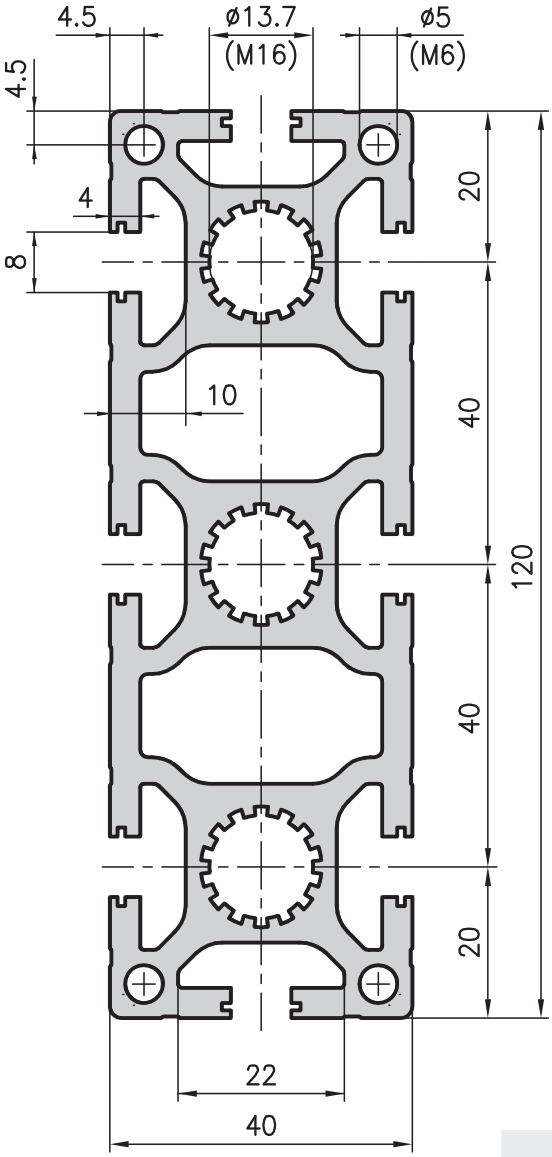

Application

The C01–9 extrusion has the same properties as the MA1-3 bearing extrusion (50x150), with slightly lower load-bearing capability.

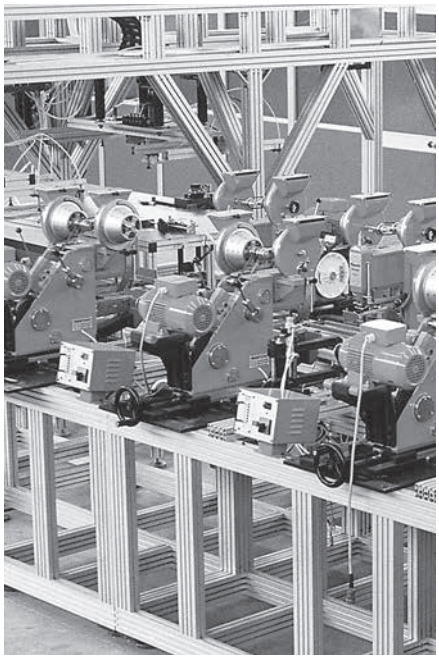

Technical data		
Ix	=	258.52 cm^4
Iy	=	33.43 cm^4
Wx	=	43.09 cm^3
Wy	=	16.72 cm^3
Cross-section area	=	19.63 cm^2
Weight	=	5.3 kg/m

Order data	Order number
40x120 bearing extrusion	
Standard length 5000 mm	C01–9–00/5000
Standard length 6000 mm	C01–9–01/6000
40x120 bearing extrusion	
Cut to length	C01–9–02–02/...
Extra machining	Pages 57–61

40x160 beam extrusion type C02–9

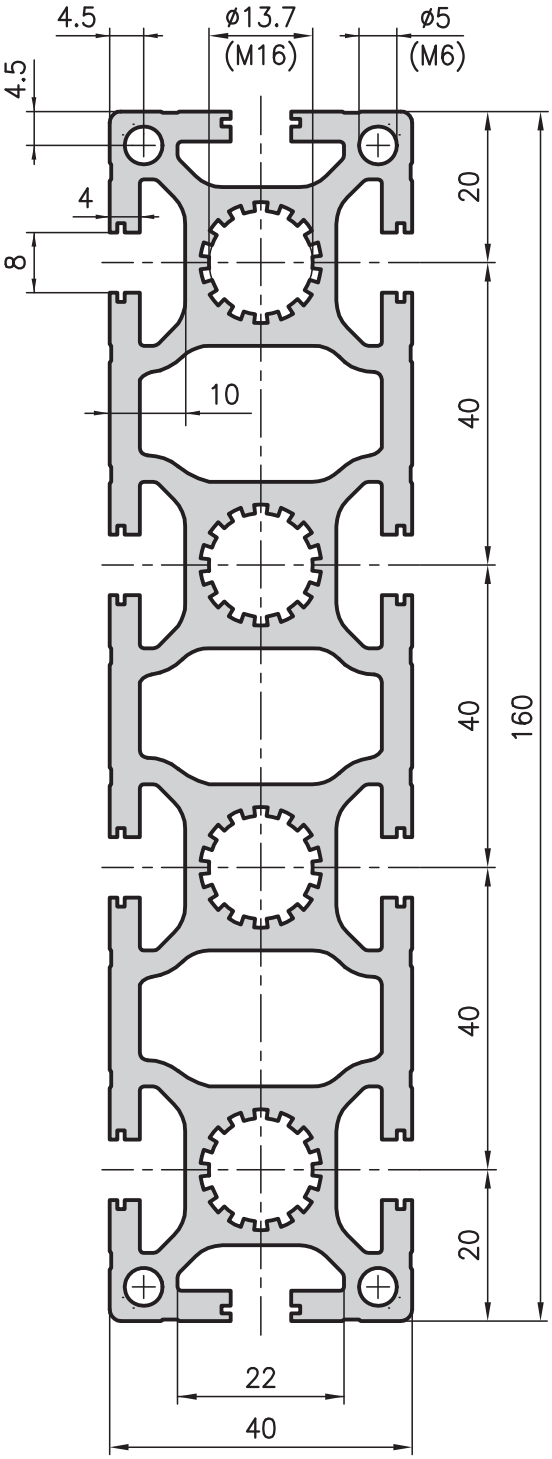

Application

This versatile extrusion is particularly useful for structures which are subjected to heavy loads and which span large widths. It can also be used as a multiple supply line for a variety of media.

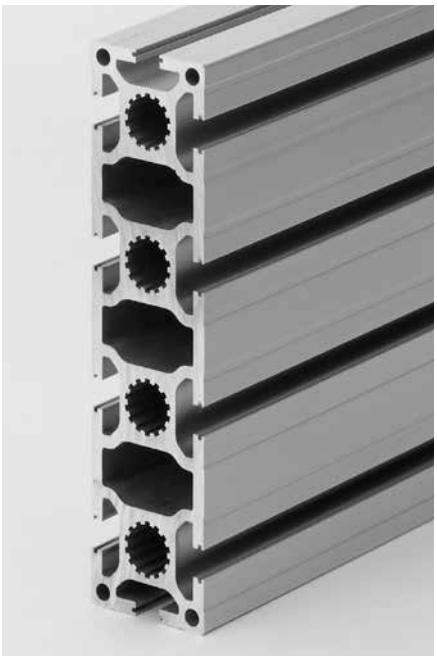

Technical data		
Ix	=	592.79 cm^4
Iy	=	44.36 cm^4
Wx	=	74.09 cm^3
Wy	=	22.18 cm^3
Cross-section area	=	25.83 cm^2
Weight	=	7.0 kg/m

Order data	Order number
40x160 bearing extrusion	
Standard length 5000 mm	C02–9–00/5000
Standard length 6000 mm	C02–9–01/6000
40x160 bearing extrusion	
Cut to length	C02–9–02–02/…
Extra machining	Pages 57–61

80x80x40 L-shaped extrusion type C01–6

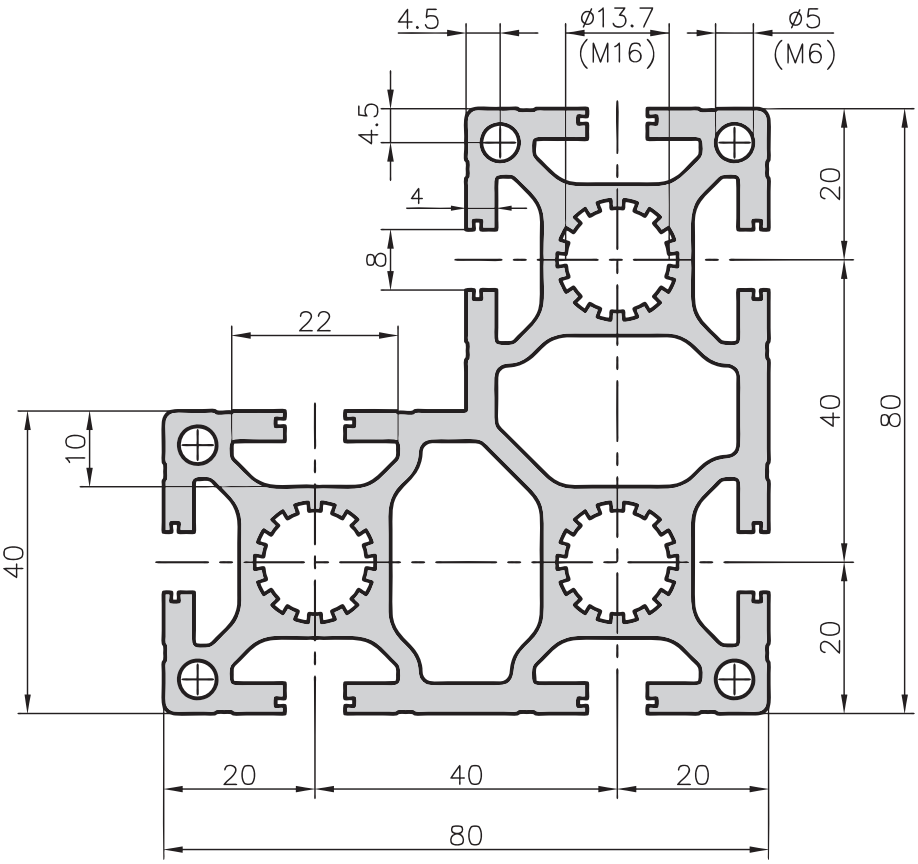

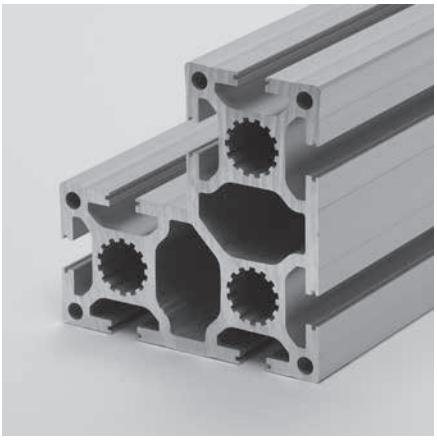

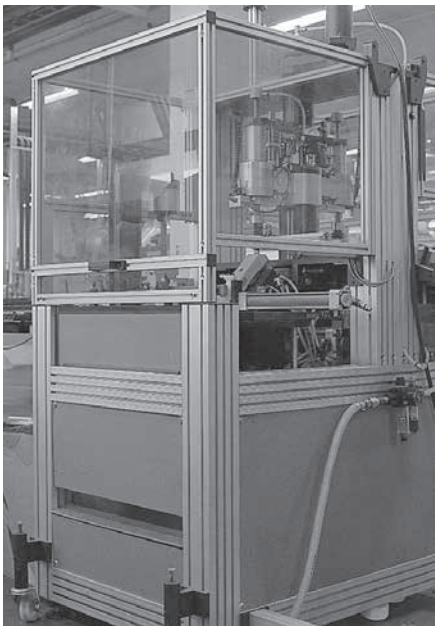

Technical data		
Ix,y	=	109.18 cm^4
Wx,y	=	23.56 cm^3
Cross-section area	=	19.59 cm^2
Weight	=	5.3 kg/m

Application

For machine and apparatus frames which have to hold heavy weights and which require strong corner components. They will also be compact and inexpensive.

Order data	Order number
80x80x40 L-shaped extrusion Standard length 5000 mm	C01–6–00/5000
80x80x40 L-shaped extrusion Cut to length	C01–6–02–02/...
Extra machining	Pages 57–61

Corner extrusion 80x80x40 round Type C03–6

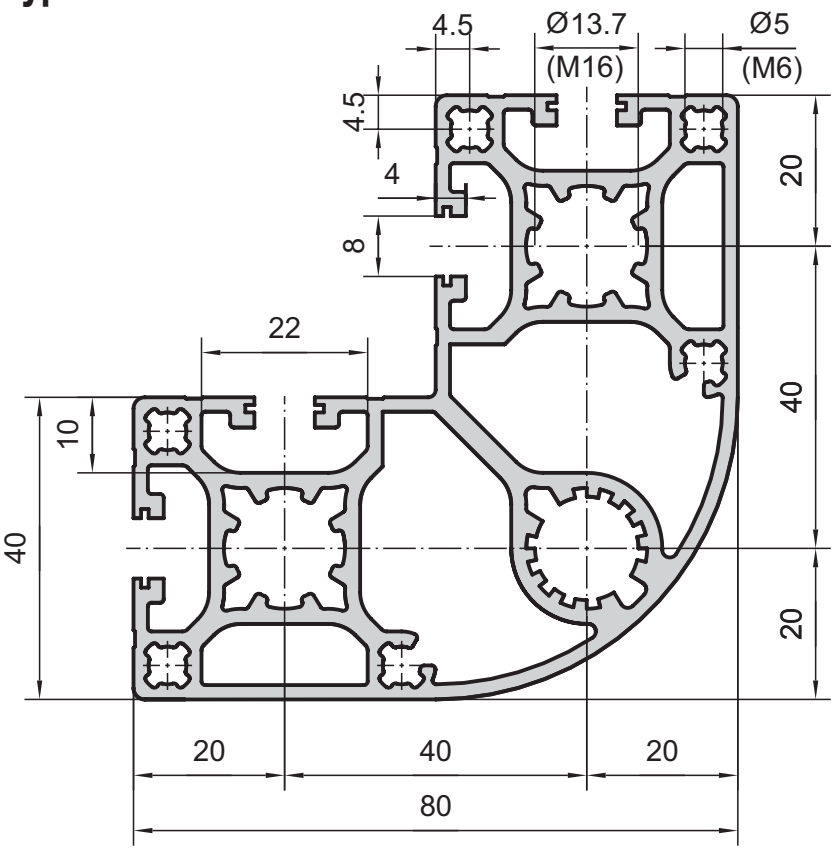

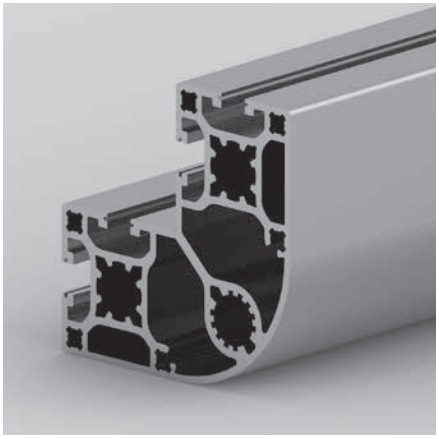

Technical data		
Ix, y	=	76.40 cm^4
Wx, y	=	19.10 cm^3
Cross-section area	=	13.33 cm^2
Weight	=	3.60 kg/m

Application

Rounded-off corners result in a soft design. Through the completely closed side, the overall look of a construction becomes more settled. Firmness and flexibility are very high.

Order data	Order number
Corner extrusion 80x80x40 round	
Standard length 5000 mm	C03–6–00/5000
Corner extrusion 80x80x40 round	
Cut to length	C03–6–02–02/…
Extra machining	Pages 57–61

80x80 base extrusion type C01–4

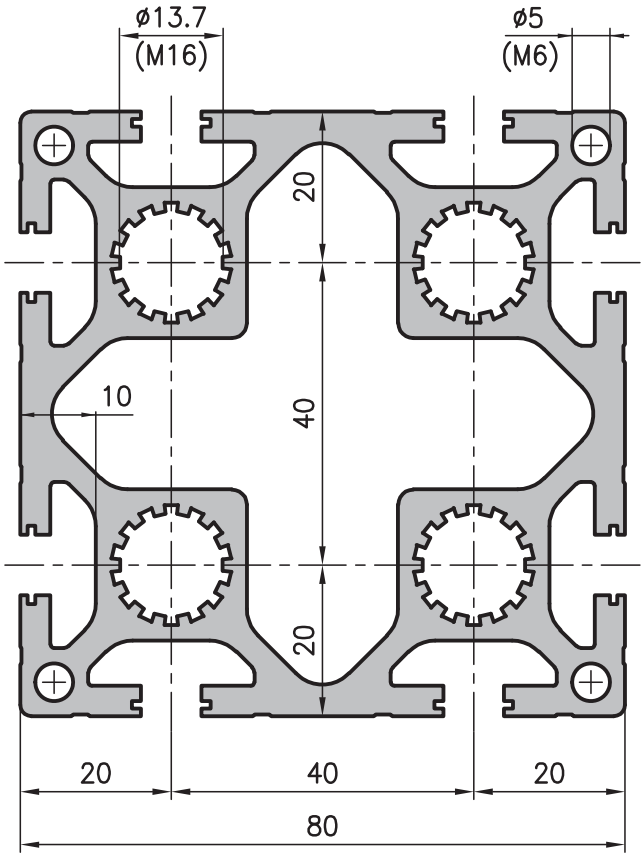

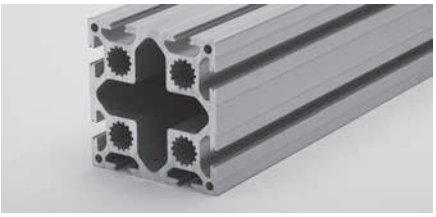

Application

This is mainly used as a support, although it can also be used as a cross-beam where higher loads are involved. Especially C01–4 is, of course, also ideal as a reservoir for liquids or gases. The large cavity can also be used effectively for holding load balancing weights. This extrusion is perfect for innovative designers.

Technical data		
Ix,y	=	154.70 cm^4
Wx,y	=	38.68 cm^3
Cross-section area	=	22.10 cm^2
Weight	=	6.0 kg/m

Order data	Order number
80x80 base extrusion	
Standard length 5000 mm	C01–4–00/5000
Standard length 6000 mm	C01–4–01/6000
80x80 base extrusion	
Cut to length	C01–4–02–02/…
Extra machining	Pages 57–61

80x80 lightweight extrusion type C03–4

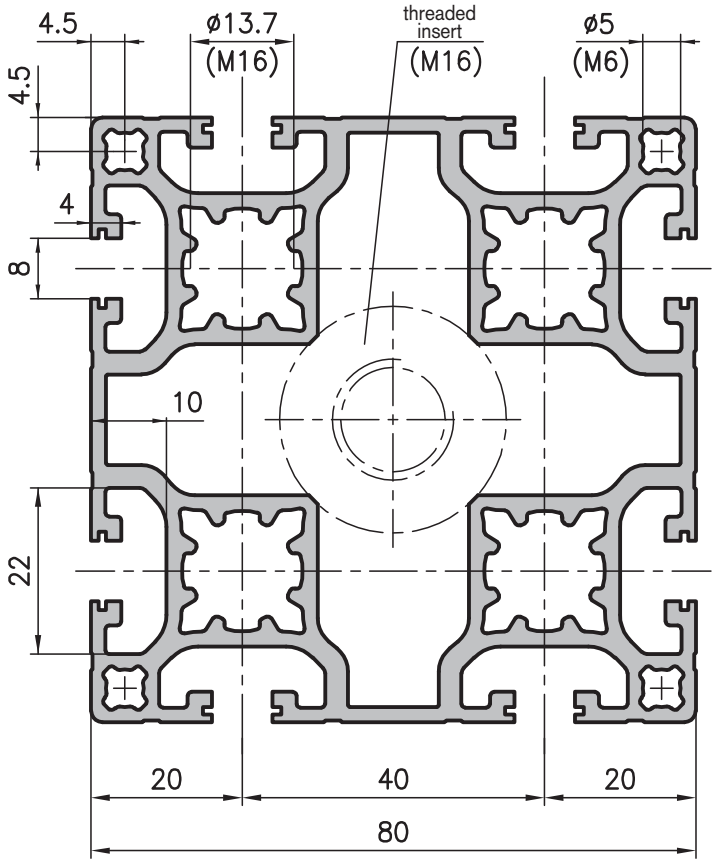

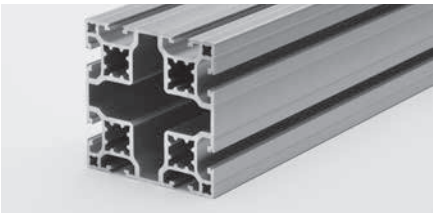

Technical data		
Ix,y	=	115.66 cm^4
Wx,y	=	28.92 cm^3
Cross-section area	=	16.30 cm^2
Weight	=	4.4 kg/m

Order data	Order number
Lightweight extrusion 80x80	
Standard length 5000 mm	C03–4–00/5000
Standard length 6000 mm	C03–4–01/6000
Lightweight extrusion 80x80	
Cut to length	C03–4–02–02/…
Extra machining	Pages 57–61

Corner extrusion 80x80
Type C03–7

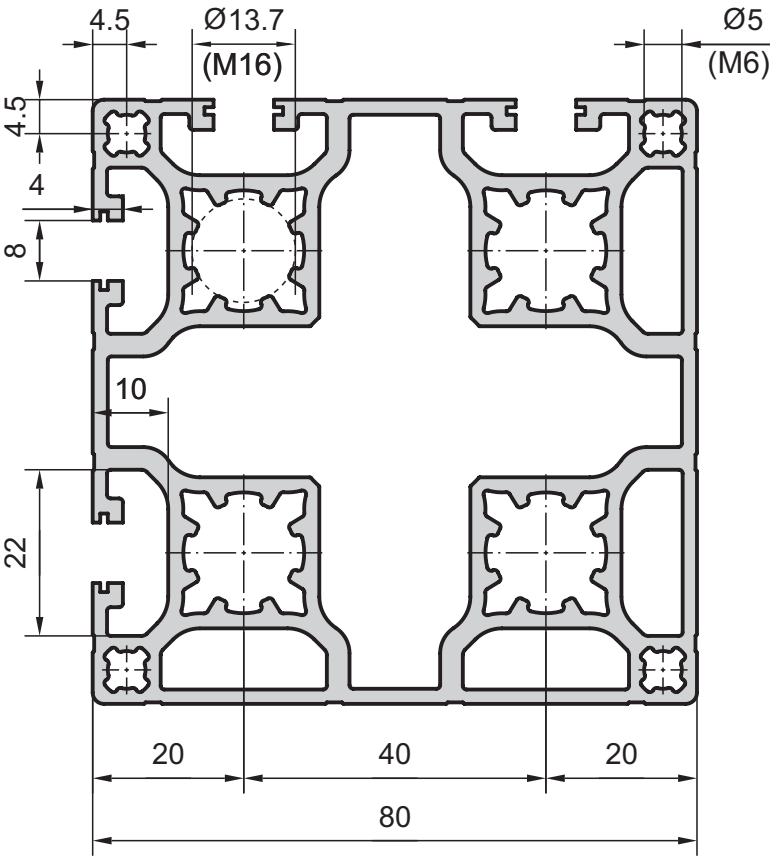

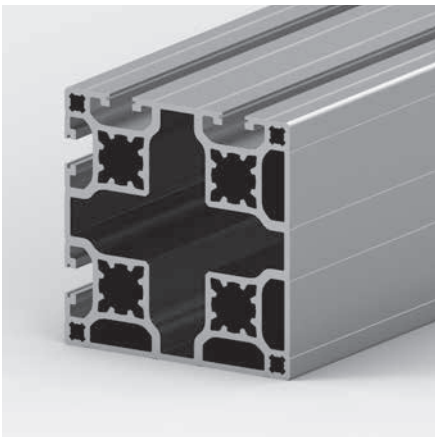

Technical data		
Ix, y	=	117.70 cm^4
Wx, y	=	29.43 cm^3
Cross-section area	=	16.45 cm^2
Weight	=	4.50 kg/m

Order data	Order number
Corner extrusion 80x80	
Standard length 5000 mm	C03–7–00/5000
Corner extrusion 80x80	
Cut to length	C03–7–02–02/…
Extra machining	Pages 57–61

Application

The corner extrusion 80x80 in lightweight design can also be ideally used as a corner pillar. Its dimension results in a great firmness; the closed fronts are convincing in their design and prevent the depositing of dirt. The profile has very versatile use.

Beam extrusion
80x120 type MC1–2

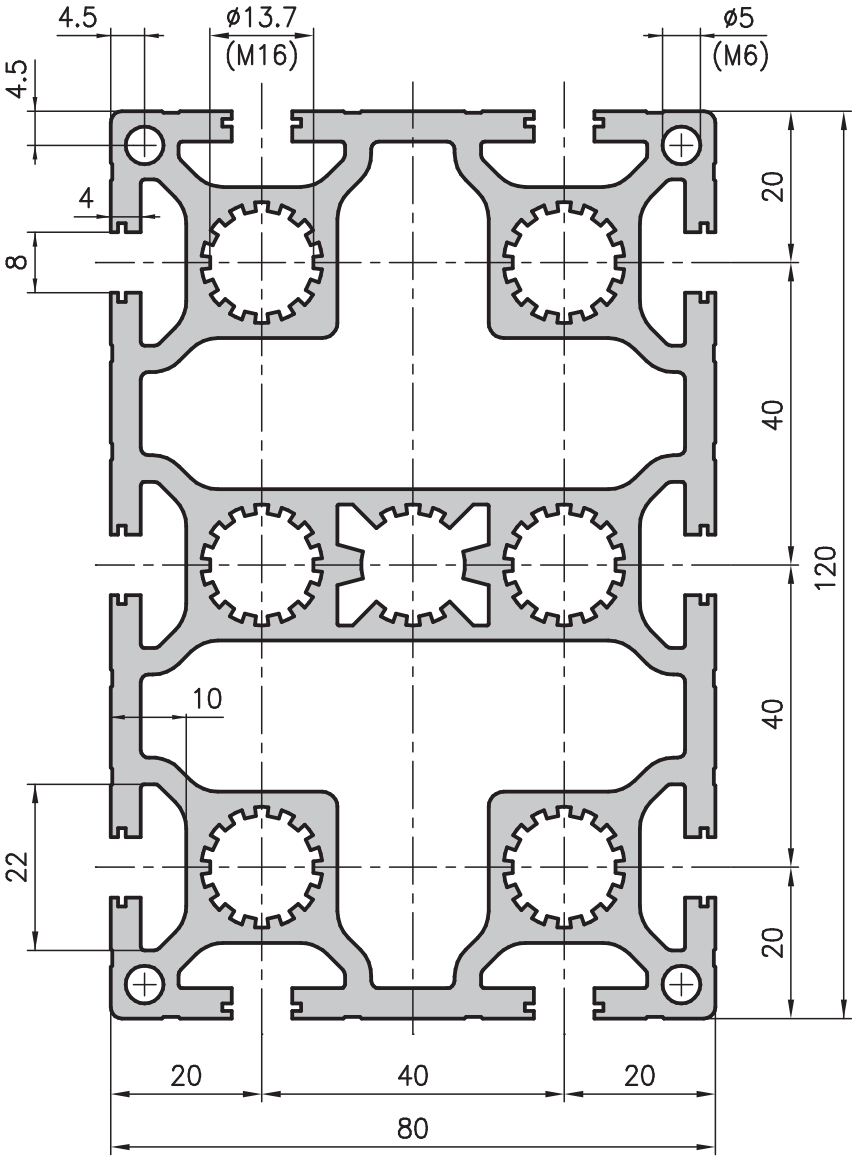

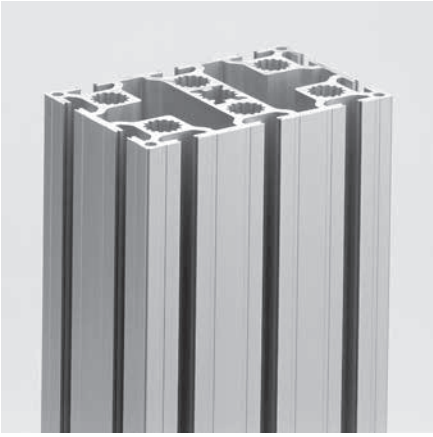

Application

A universally useful extrusion with optimum static strength for large gantries and constructions under heavy load.

Technical data		
Ix	=	451.20 cm^4
Iy	=	219.76 cm^4
Wx	=	75.20 cm^3
Wy	=	54.94 cm^3
Cross-section area	=	31.07 cm^2
Weight	=	8.40 kg/m

Order data	Order number
Beam extrusion 80x120 Standard length 6000 mm	MC1–2–01/6000
Beam extrusion 80x120 Cut to length	MC1–2–02–02/…
Extra machining	Pages 57–61

80x160 heavy duty extrusion type MC1–9

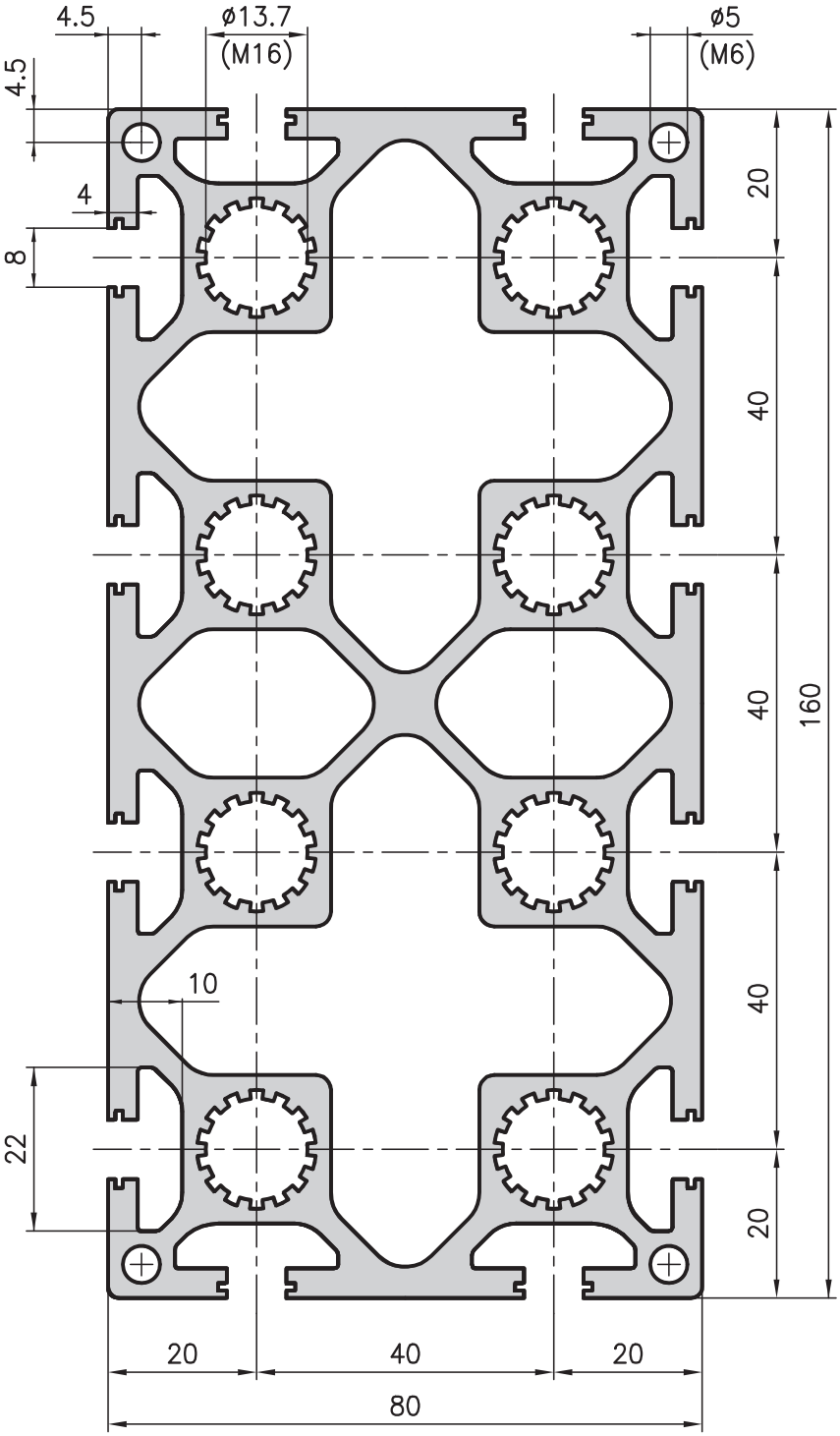

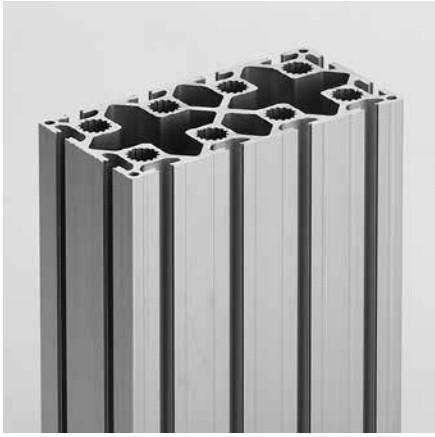

Application

This high strength extrusion is used for the construction of gantries and for structures which have to support a heavy load or which have long unsupported sections.

Technical data		
Ix	=	1018.98 cm^4
Iy	=	296.53 cm^4
Wx	=	112.37 cm^3
Wy	=	74.13 cm^3
Cross-section area	=	40.82 cm^2
Weight	=	11.0 kg/m

Order data	Order number
80x160 heavy duty extrusion	
Standard length 5000 mm	MC1–9–00/5000
Standard length 6000 mm	MC1–9–01/6000
80x160 heavy duty extrusion	
Cut to length	MC1–9–02–02/…
Extra machining	Pages 57–61

Four sided softline extrusion 30x30 type B10–0

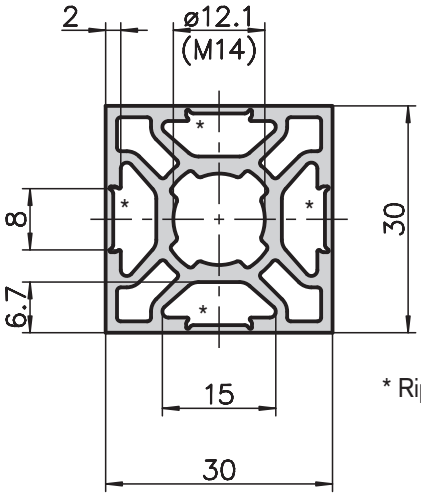

* Rip off slot

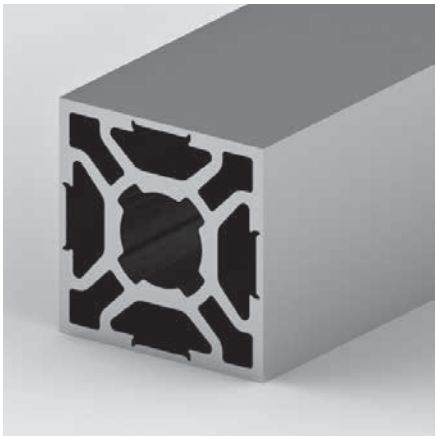

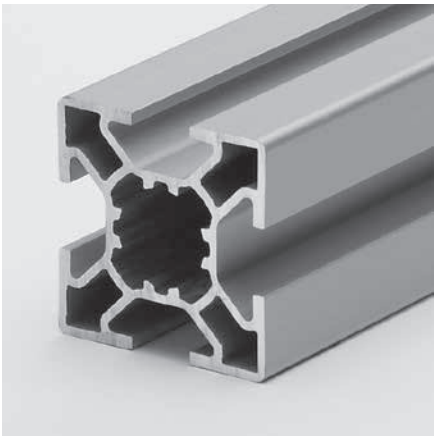

Technical data		
Ix,y	=	3.30 cm^4
Wx,y	=	2.20 cm^3
Cross-section area	=	3.57 cm^2
Weight	=	0.96 kg/m

Order data	Order number
Four sided softline extrusion 30x30	
Standard length 5000 mm	B10–0–00/5000
Four sided softline extrusion 30x30	
Cut to length	B10–0–02–02/…
Extra machining	Pages 57–61

Super lightweight extrusion 30x30 type B03–1

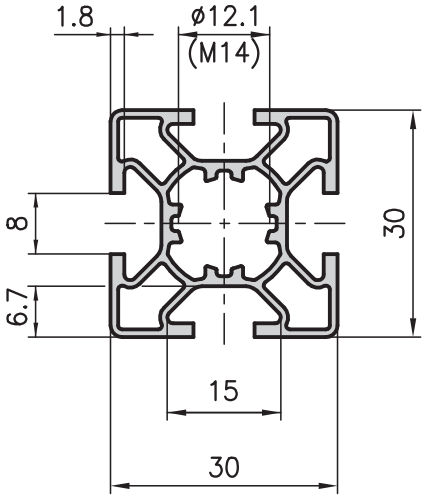

Application

These extrusions, which are lightweight and inexpensive, are nonetheless very sturdy and can be universally used for simpler structural designs. Outer casings, safety guards, laboratory rigs and smaller frameworks are all easy to construct using them.

Technical data		
Ix,y	=	2.63 cm^4
Wx,y	=	1.76 cm^3
Cross-section area	=	2.62 cm^2
Weight	=	0.7 kg/m

Order data	Order number
Super lightweight extrusion 30x30	
Standard length 5000 mm	B03–1–00/5000
Super lightweight extrusion 30x30	
Cut to length	B03–1–02–02/…
Extra machining	Pages 57–61

Lightweight extrusion 30x30 type B02–1

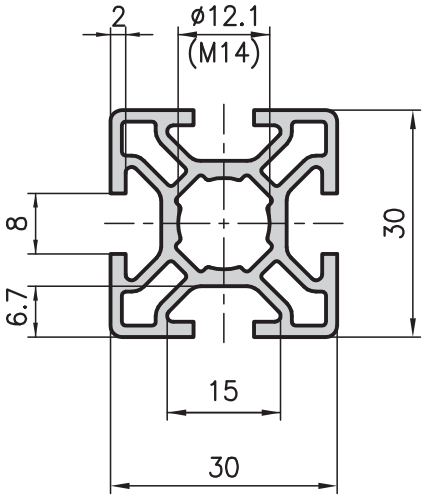

Application
With slots on all sides, this universally used lightweight extrusion is optimally constructed with regard to weight and strength. For lightweight enclosures and other small constructions, this is an inexpensive and sturdy extrusion.

Technical data		
Ix,y	=	2.95 cm^4
Wx,y	=	1.97 cm^3
Cross-section area	=	3.27 cm^2
Weight	=	0.9 kg/m

Order data	Order number
Lightweight extrusion 30x30 Standard length 5000 mm	B02–1–00/5000
Lightweight extrusion 30x30 Cut to length	B02–1–02–02/…
Extra machining	Pages 57–61

Heavy duty extrusion 30x30 type MB1–1

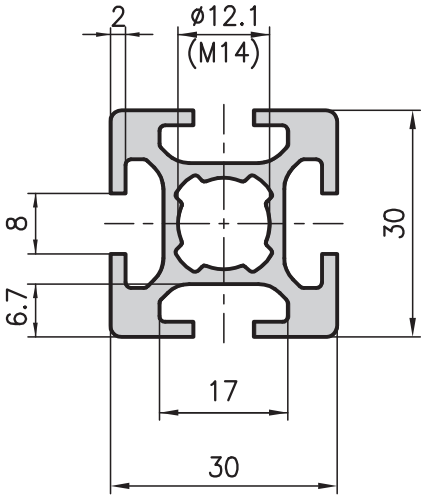

Application
The counterpart to the lightweight extrusion. It gives the designer plenty of scope for designing: trolleys, machine frames, load-bearing structures, etc.

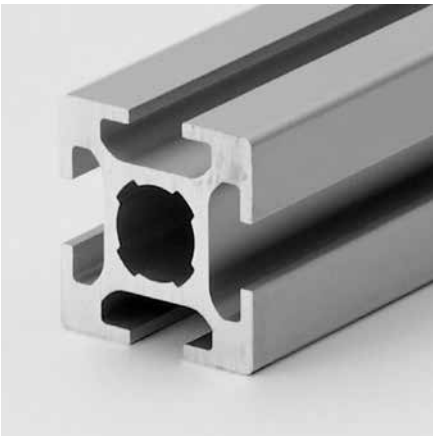

Technical data		
Ix,y	=	3.82 cm^4
Wx,y	=	2.54 cm^3
Cross-section area	=	4.10 cm^2
Weight	=	1.1 kg/m

Order data	Order number
Heavy duty extrusion 30x30 Standard length 5000 mm	MB1–1–00/5000
Heavy duty extrusion 30x30 Cut to length	MB1–1–02–02/…
Extra machining	Pages 57–61

30x30 face extrusion type B03–2

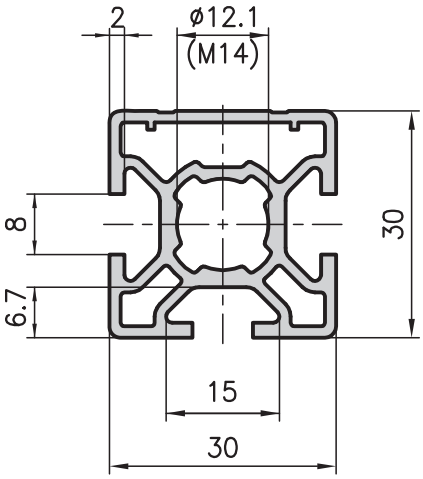

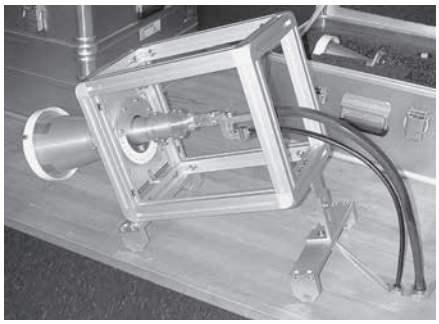

30x30 face extrusion with panel slots type B02–2

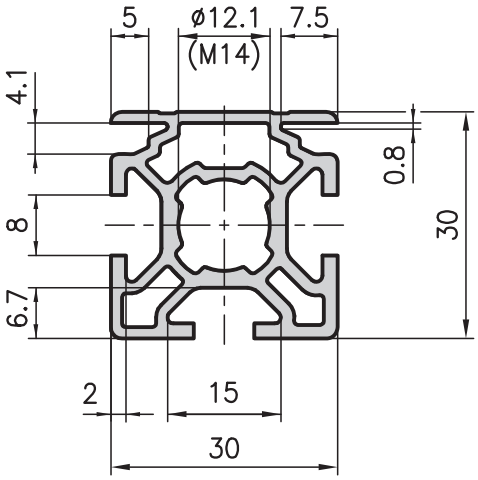

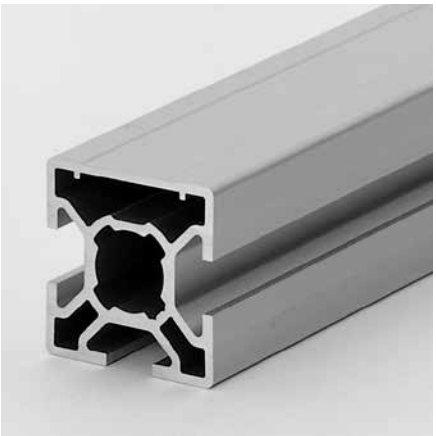

Application
For lightweight machine frames, protective guards, safety fencing, etc. Metal panelling sheets, as well as composite panels, acrylic glass panels and all-plastic panels up to 4 mm in thickness can be fixed in place into the panel slots on the face extrusions.

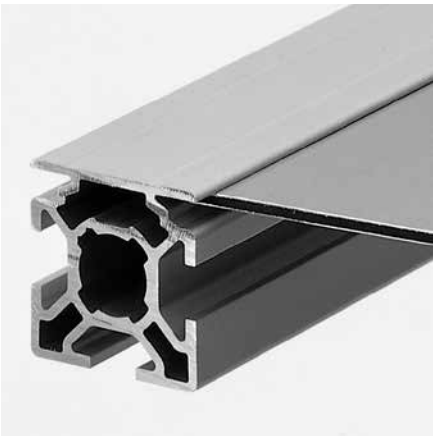

Technical data		
Ix	=	2.85 cm^4
Iy	=	2.83 cm^4
Wx	=	1.90 cm^3
Wy	=	1.83 cm^3
Cross-section area	=	3.10 cm^2
Weight	=	0.8 kg/m

Order data	Order number
30x30 face extrusion Standard length 5000 mm	B03–2–00/5000
30x30 face extrusion Cut to length	B03–2–02–02/…
Extra machining	Pages 57–61

Technical data		
Ix	=	2.93 cm^4
Iy	=	2.76 cm^4
Wx	=	1.93 cm^3
Wy	=	1.84 cm^3
Cross-section area	=	3.18 cm^2
Weight	=	0.9 kg/m

Order data	Order number
30x30 face enclosure extrusion Standard length 5000 mm	B02–2–00/5000
30x30 face enclosure extrusion Cut to length	B02–2–02–02/…
Extra machining	Pages 57–61

30x30 corner extrusion type B02–3

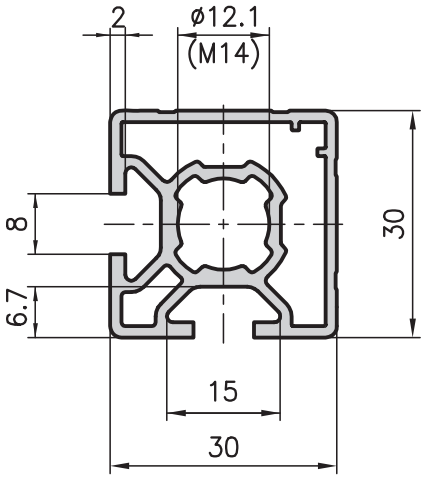

30x30 corner extrusion with panel slots type B01–3

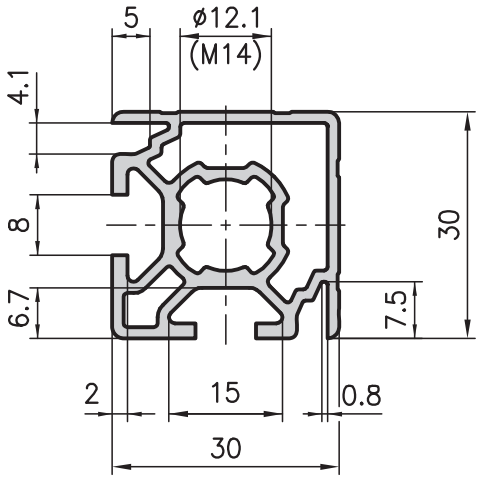

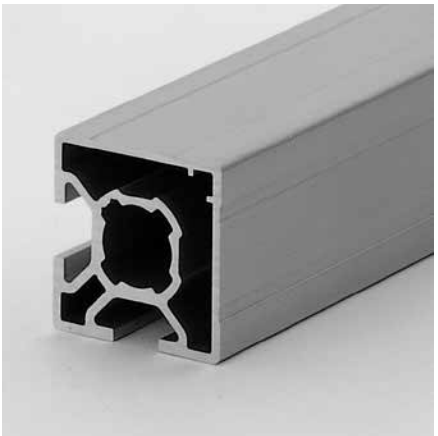

Application
Workstation design, enclosures, apparatus trolleys and more lightweight structures. This corner profile looks extremely compact because it is closed on two sides and is the natural choice in any application where only two slots are required for joining components together. Metal and/or composite panels are easy to fit as enclosure elements thanks to the additional panel slots.

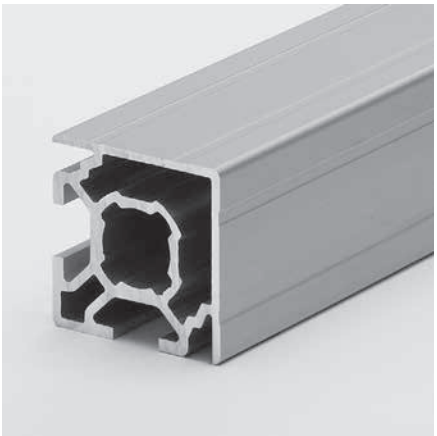

Technical data		
Ix,y	=	2.70 cm^4
Wx,y	=	1.75 cm^3
Cross-section area	=	2.95 cm^2
Weight	=	0.8 kg/m

Order data	Order number
30x30 corner extrusion	
Standard length 5000 mm	B02–3–00/5000
30x30 corner extrusion	
Cut to length	B02–3–02–02/…
Extra machining	Pages 57–61

Technical data		
Ix,y	=	2.70 cm^4
Wx,y	=	1.75 cm^3
Cross-section area	=	2.98 cm^2
Weight	=	0.8 kg/m

Order data	Order number
30x30 corner enclosure extrusion	
Standard length 5000 mm	B01–3–00/5000
30x30 corner enclosure extrusion	
Cut to length	B01–3–02–02/…
Extra machining	Pages 57–61

30x30 double face extrusion type B02–4

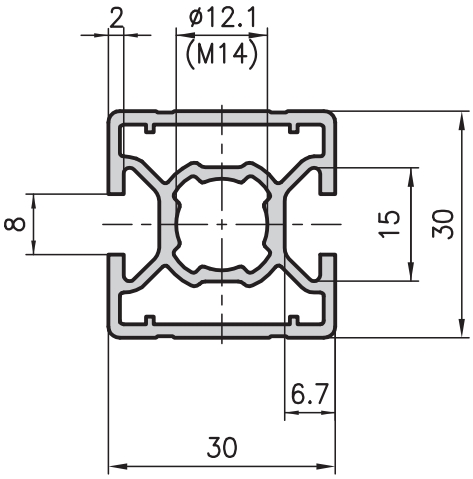

Application
For all types of enclosure, as well as for structures with extrusion faces which are mainly closed and for applications with an attractive design.

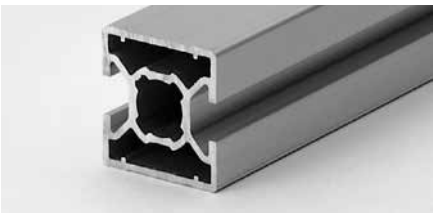

Technical data		
Ix	=	2.73 cm^4
Iy	=	2.74 cm^4
Wx	=	1.82 cm^3
Wy	=	1.83 cm^3
Cross-section area	=	2.91 cm^2
Weight	=	0.8 kg/m

Order data	Order number
30x30 double face extrusion Standard length 5000 mm	B02–4–00/5000
30x30 double face extrusion Cut to length	B02–4–02–02/…
Extra machining	Pages 57–61

30x30 softline extrusion type B01–8

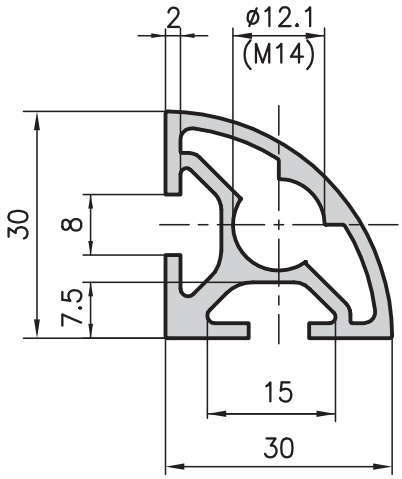

Application
This extrusion is used to build furniture, display cases and other objects without obtrusive sharp edges.

Technical data		
Ix,y	=	2.57 cm^4
Wx,y	=	2.02 cm^3
Cross-section area	=	2.91 cm^2
Weight	=	0.8 kg/m

Order data	Order number
30x30 softline extrusion Standard length 5000 mm	B01–8–00/5000
30x30 softline extrusion Cut to length	B01–8–02–02/…
Extra machining	Pages 57–61

30° angle extrusion type B04–3

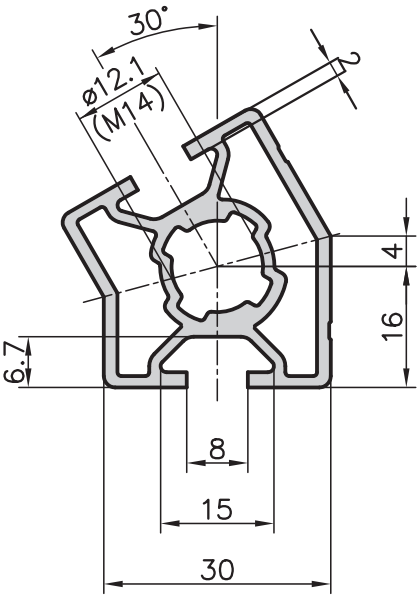

45° angle extrusion type B04–4

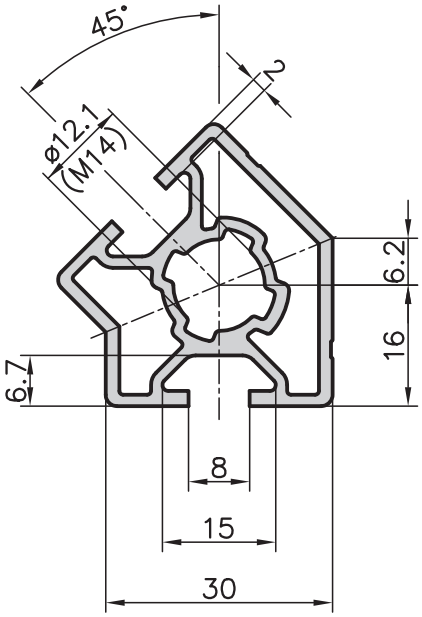

Application
For stands, tables, safety guards or display cabinets with sloping surfaces or for any angled construction. This group of extrusions ensures elegant shapes.

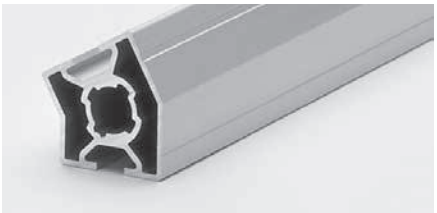

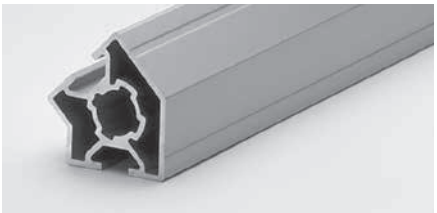

Technical data		
Ix	=	3.23 cm^4
Iy	=	2.89 cm^4
Wx	=	1.54 cm^3
Wy	=	1.48 cm^3
Cross-section area	=	3.13 cm^2
Weight	=	0.9 kg/m

Order data	Order number
30° angle extrusion Standard length 5000 mm	B04–3–00/5000
30° angle extrusion Cut to length	B04–3–02–02/…
Extra machining	Pages 57–61

Technical data		
Ix	=	3.14 cm^4
Iy	=	2.91 cm^4
Wx	=	1.44 cm^3
Wy	=	1.45 cm^3
Cross-section area	=	3.13 cm^2
Weight	=	0.9 kg/m

Order data	Order number
45° angle extrusion Standard length 5000 mm	B04–4–00/5000
45° angle extrusion Cut to length	B04–4–02–02/…
Extra machining	Pages 57–61

60° angle extrusion type B04–6

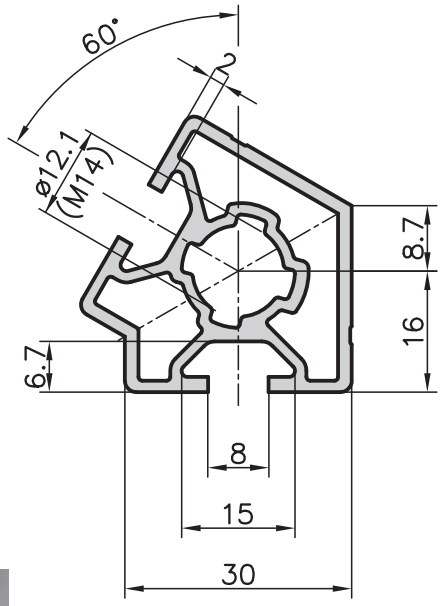

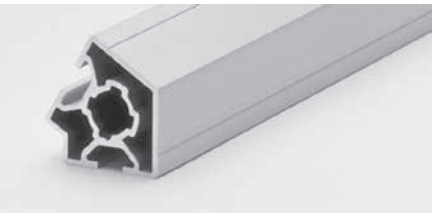

Technical data		
Ix	=	3.07 cm^4
Iy	=	2.94 cm^4
Wx	=	1.45 cm^3
Wy	=	1.51 cm^3
Cross-section area	=	3.04 cm^2
Weight	=	0.9 kg/m

Order data	Order number
60° angle extrusion Standard length 5000 mm	B04–6–00/5000
60° angle extrusion Cut to length	B04–6–02–02/…
Extra machining	Pages 57–61

Base extrusion 30x50 type B01–9

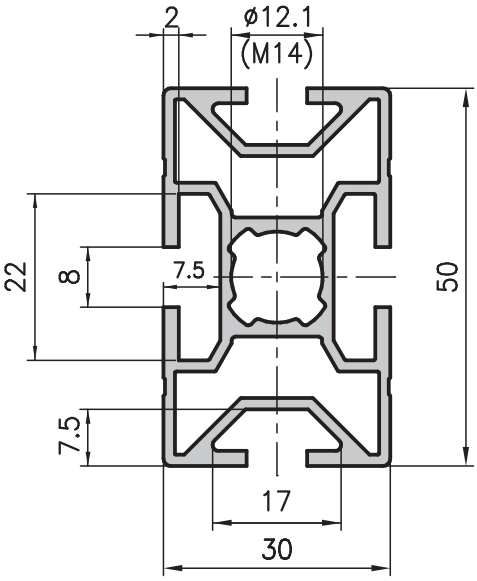

Application
Used for all types of structures, base frames, trolleys, conveyor belts, etc. Universally used, easy to use in conjunction with extrusions with bases of 30, 40 or 50. This extrusion is sturdy and strong, despite using little aluminium.

Technical data		
Ix	=	10.94 cm^4
Iy	=	4.33 cm^4
Wx	=	4.38 cm^3
Wy	=	2.90 cm^3
Cross-section area	=	4.34 cm^2
Weight	=	1.2 kg/m

Order data	Order number
Base extrusion 30x50 Standard length 5000 mm	B01–9–00/5000
Base extrusion 30x50 Cut to length	B01–9–02–02/…
Extra machining	Pages 57–61

Application
Ideal for any application which requires an attractive design and structural stability. This is another versatile extrusion which can be used for tackling a wide range of different problems.

These extrusions need a special barrel if the connector is fitted on the short side (see image). The connectors with the long barrels have the following item numbers:

Order data	Order number
Round-headed connector	B215–90
Horizontal-headed connector	B215–10
Vertical-headed connector	B215–20

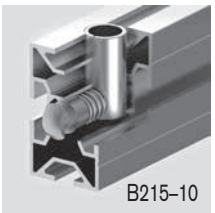
B215–10

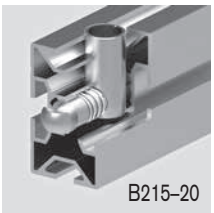
B215–20

Face extrusion 30x50 type MB2–9

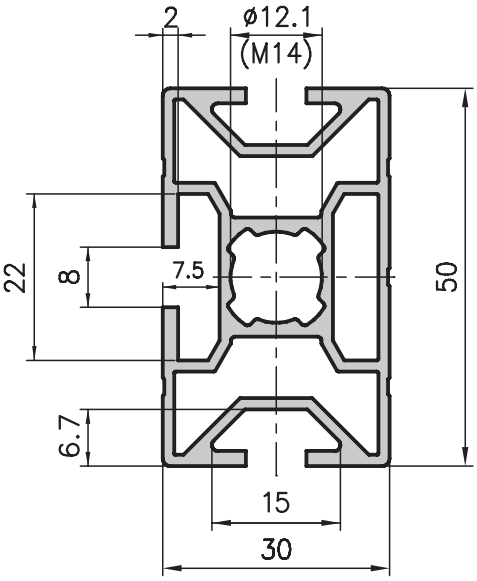

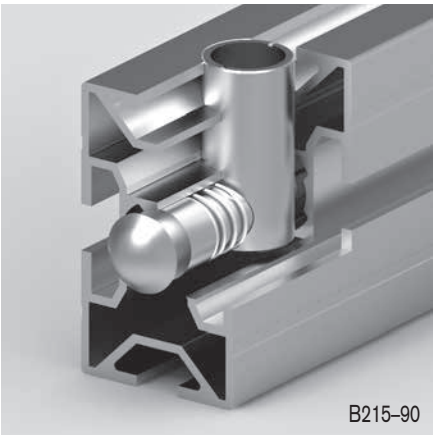
B215–90

Technical data		
Ix	=	11.30 cm^4
Iy	=	4.55 cm^4
Wx	=	4.52 cm^3
Wy	=	3.03 cm^3
Cross-section area	=	4.52 cm^2
Weight	=	1.3 kg/m

Order data	Order number
Face extrusion 30x50 Standard length 5000 mm	MB2–9–00/5000
Face extrusion 30x50 Cut to length	MB2–9–02–02/…
Extra machining	Pages 57–61

30x50 face extrusion with panel slots type MB1–9

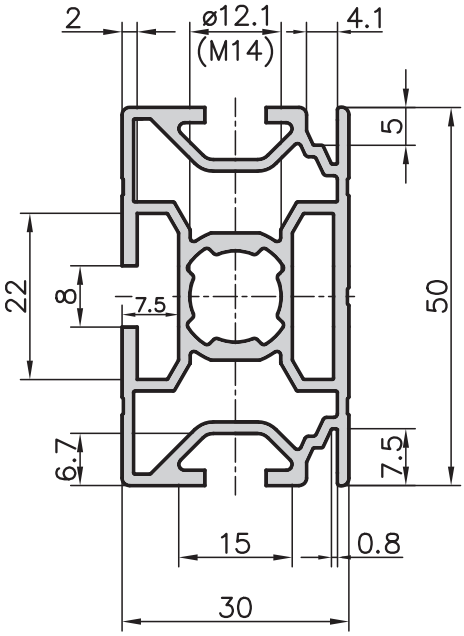

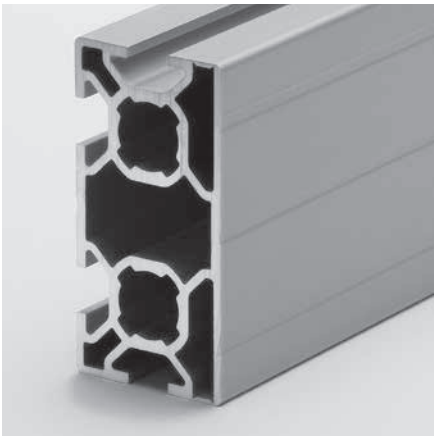

Application

The narrow slots hold panels measuring up to 4 mm in thickness securely and firmly in place. Therefore, this extrusion is ideal in any application where covers and cladding of various types are being fitted.

Technical data		
Ix	=	11.25 cm^4
Iy	=	4.84 cm^4
Wx	=	4.50 cm^3
Wy	=	3.23 cm^3
Cross-section area	=	5.00 cm^2
Weight	=	1.3 kg/m

Order data	Order number
30x50 face extrusion with panel slots Standard length 5000 mm	MB1–9–00/5000
30x50 face extrusion with panel slots Cut to length	MB1–9–02–02/…
Extra machining	Pages 57–61

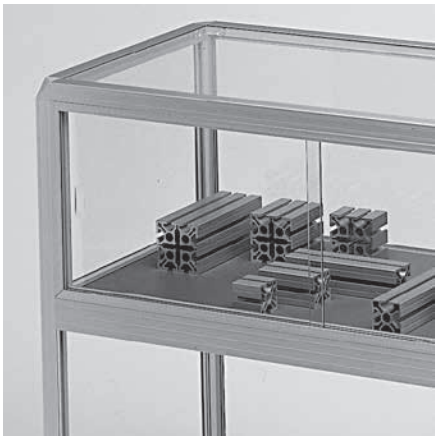

30x60 face extrusion with panel slots type B03–6

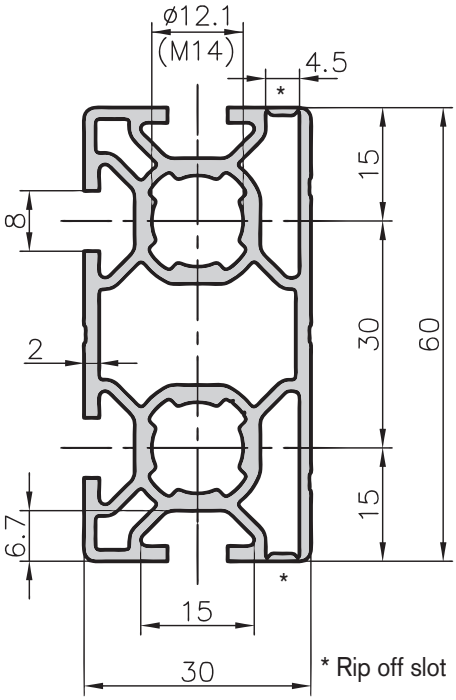

Application

With the same function as the extrusion type MB1–9 but with the difference being that the small slots have to be opened if they are required.

Technical data		
Ix	=	19.33 cm^4
Iy	=	5.43 cm^4
Wx	=	6.44 cm^3
Wy	=	3.60 cm^3
Cross-section area	=	5.48 cm^2
Weight	=	1.5 kg/m

Order data	Order number
30x60 face extrusion with panel slots Standard length 5000 mm	B03–6–00/5000
30x60 face extrusion with panel slots Cut to length	B03–6–02–02/…
Extra machining	Pages 57–61

30x60 base extrusion type B01–6

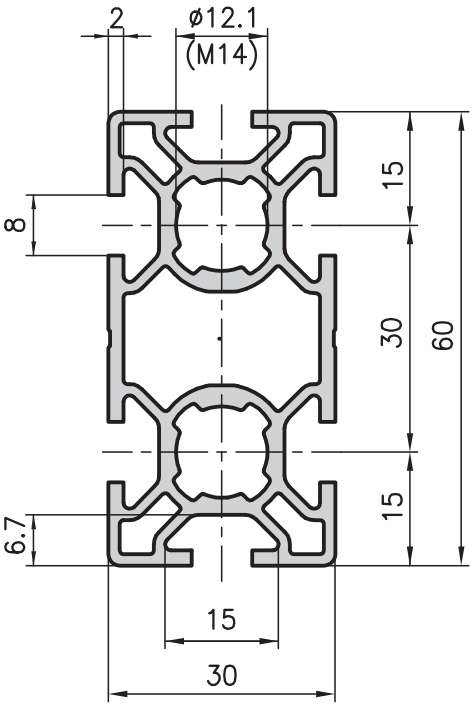

60x60 base extrusion type B02–6

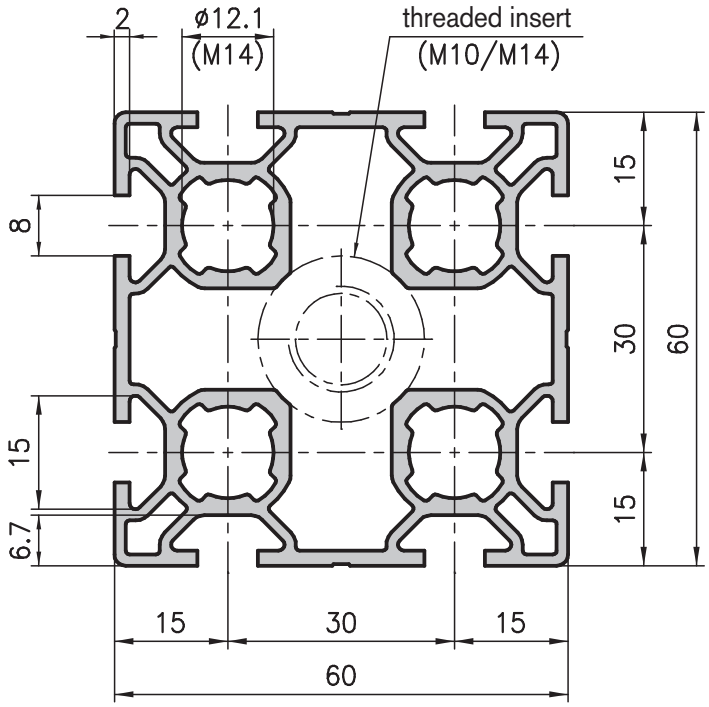

Application
Ideally suited for use as a cross-beam or for building lightweight conveyor belts. A versatile extrusion for many applications.

Application
Mainly used as a brace. Levelling feet and castors can be attached using the threaded inserts B33–60 or B33–64 (page 162).

Technical data		
Ix	=	20.52 cm^4
Iy	=	5.20 cm^4
Wx	=	6.84 cm^3
Wy	=	3.47 cm^3
Cross-section area	=	5.47 cm^2
Weight	=	1.5 kg/m

Order data	Order number
30x60 base extrusion Standard length 5000 mm	B01–6–00/5000
30x60 base extrusion Cut to length	B01–6–02–02/…
Extra machining	Pages 57–61

Technical data		
Ix,y	=	35.83 cm^4
Wx,y	=	11.94 cm^3
Cross-section area	=	9.04 cm^2
Weight	=	2.4 kg/m

Order data	Order number
60x60 base extrusion Standard length 5000 mm	B02–6–00/5000
60x60 base extrusion Cut to length	B02–6–02–02/…
Insert M10	B33–60
Insert M14	B33–64
Extra machining	Pages 57–61

30x100 base extrusion type MB1–2

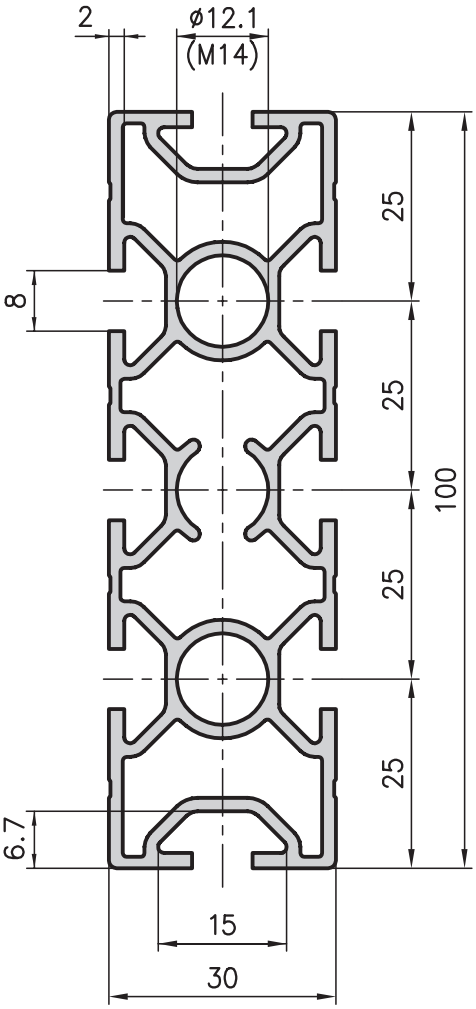

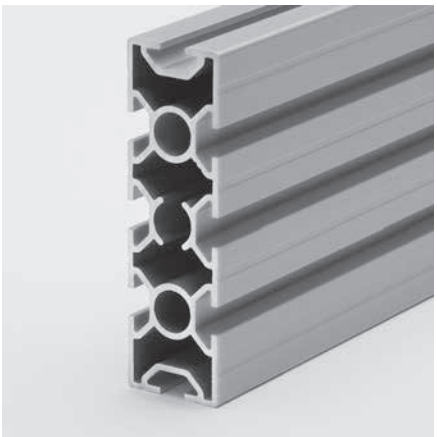

Application

For cross-beams on base frames, conveyor belts, trolleys or for large areas of panelling. This versatile extrusion can also be used in combination with extrusions with a base of 40 or 50 mm. A lightweight, sturdy extrusion which can be connected in many different configurations.

30x100 face extrusion with panel slots type B01–2

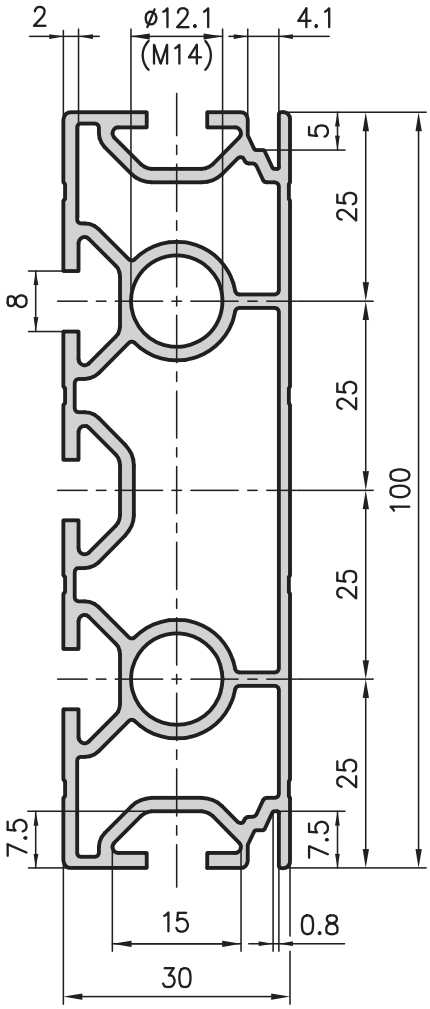

Technical data		
Ix	=	80.77 cm^4
Iy	=	8.95 cm^4
Wx	=	16.15 cm^3
Wy	=	5.97 cm^3
Cross-section area	=	8.59 cm^2
Weight	=	2.3 kg/m

Order data	Order number
30x100 base extrusion Standard length 5000 mm	MB1–2–00/5000
30x100 base extrusion Cut to length	MB1–2–02–02/…
Extra machining	Pages 57–61

Technical data		
Ix	=	77.86 cm^4
Iy	=	8.79 cm^4
Wx	=	15.57 cm^3
Wy	=	5.72 cm^3
Cross-section area	=	7.72 cm^2
Weight	=	2.1 kg/m

Order data	Order number
30x100 face enclosure extrusion Standard length 5000 mm	B01–2–00/5000
30x100 face enclosure extrusion Cut to length	B01–2–02–02/…
Extra machining	Pages 57–61

30x300 face extrusion type B03–3

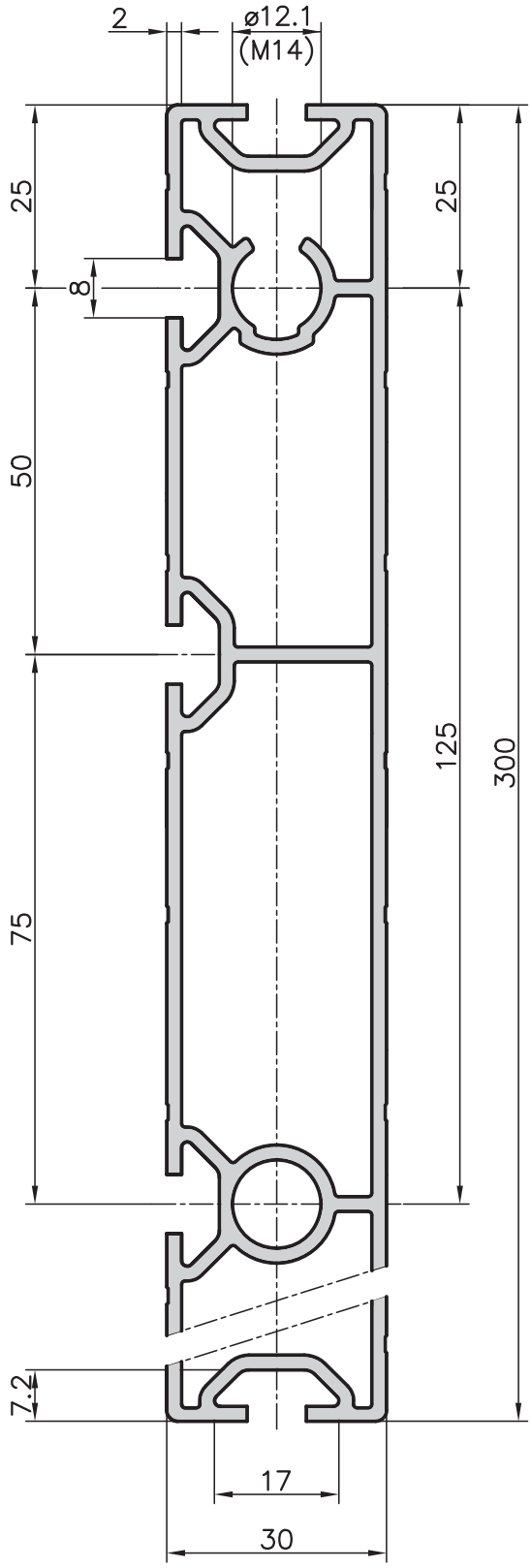

Application
Positioned on its edge, this extrusion can be used as a cross-beam to support heavy loads. However, it can also be used as a bed plate or as a superior panel.

Technical data		
Ix	=	1755.64 cm^4
Iy	=	26.06 cm^4
Wx	=	117.04 cm^3
Wy	=	17.30 cm^3
Cross-section area	=	18.74 cm^2
Weight	=	5.10 kg/m

Order data	Order number
30x300 face extrusion Standard length 5000 mm	B03–3–00/5000
30x300 face extrusion Cut to length	B03–3–02–02/…
Extra machining	Pages 57–61

20x20 base extrusion type D01–5

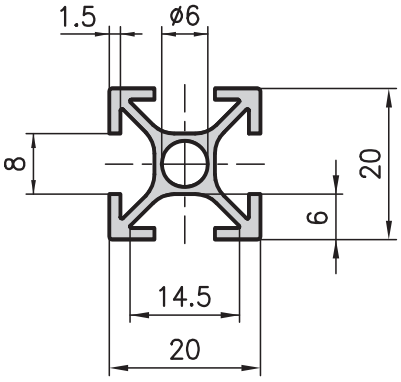

20x20 corner extrusion type D01–3

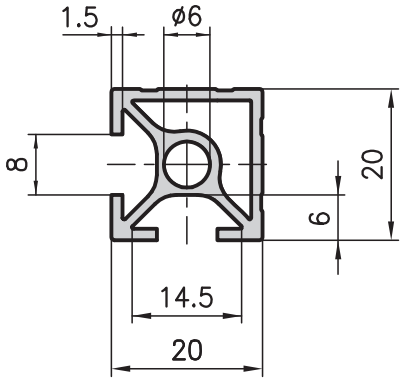

20x20 face extrusion type D01–8

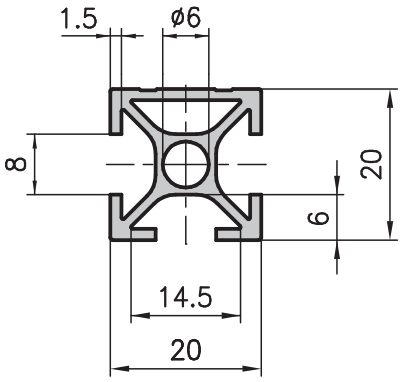

Application
Due to their relatively low weight and strength this 20x20/40 range of extrusions can only be used for small loads, such as limit switches fixtures, smart work frames, small display cases, etc.

Helicoil inserts (DIN 8140) can be used for all extrusions with a core hole of Ø 6 See machining code H3/H4.

The 20x20 and 20x40 extrusions are also suitable as a support or reinforcement extrusion behind panels, which is in combination with the base 30 extrusion with panel slots (see sketch).

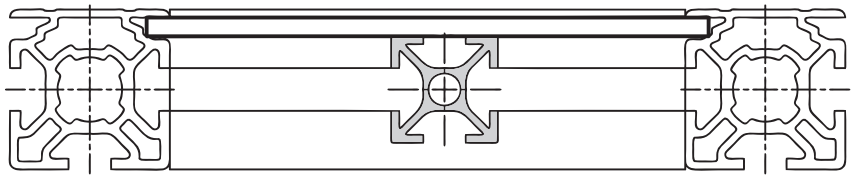

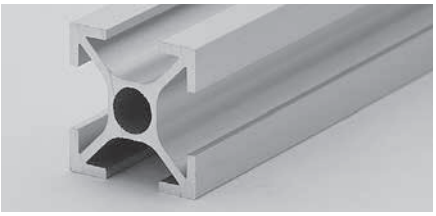

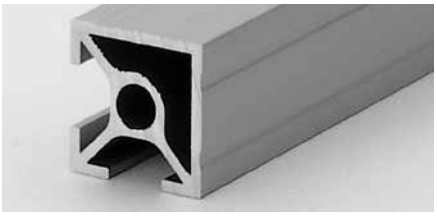

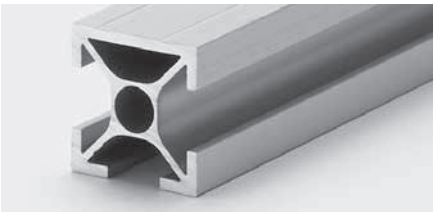

Technical data		
Ix,y	=	0.60 cm^4
Wx,y	=	0.60 cm^3
Cross-section area	=	1.40 cm^2
Weight	=	0.38 kg/m

Order data	Order number
20x20 base extrusion Standard length 5000 mm	D01–5–00/5000
20x20 base extrusion Cut to length	D01–5–02–02/…
Extra machining	Pages 57–61

Technical data		
Ix, y	=	0.65 cm^4
Wx, y	=	0.65 cm^3
Cross-section area	=	1.54 cm^2
Weight	=	0.42 kg/m

Order data	Order number
20x20 corner extrusion Standard length 5000 mm	D01–3–00/5000
20x20 corner extrusion Cut to length	D01–3–02–02/…
Extra machining	Pages 57–61

Technical data		
Ix	=	0.68 cm^4
Iy	=	0.59 cm^4
Wx	=	0.68 cm^3
Wy	=	0.59 cm^3
Cross-section area	=	1.46 cm^2
Weight	=	0.39 kg/m

Order data	Order number
20x20 face extrusion Standard length 5000 mm	D01–8–00/5000
20x20 face extrusion Cut to length	D01–8–02–02/…
Extra machining	Pages 57–61

20x20 Softline extrusion type D03–8

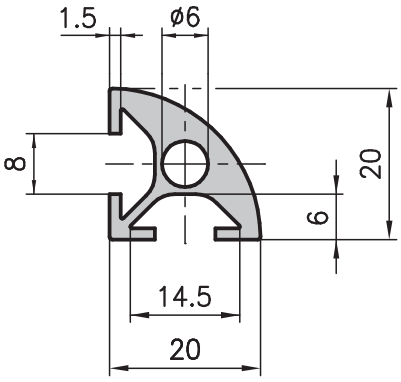

Application
For small picture frames as well as for decorative application.

Technical data		
Ix, y	=	0.47 cm^4
Wx, y	=	0.47 cm^3
Cross-section area	=	1.29 cm^2
Weight	=	0.35 kg/m

Order data	Order number
20x20 Softline extrusion Standard length 5000 mm	D03–8–00/5000
20x20 Softline extrusion Cut to length	D03–8–02–02/…
Extra machining	Pages 57–61

20x40 base extrusion type D01–7

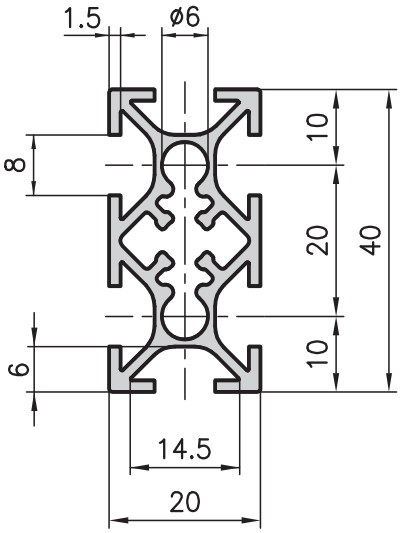

Technical data		
Ix	=	3.91 cm^4
Iy	=	1.10 cm^4
Wx	=	1.95 cm^3
Wy	=	1.10 cm^3
Cross-section area	=	2.69 cm^2
Weight	=	0.73 kg/m

Order data	Order number
20x40 base extrusion Standard length 5000 mm	D01–7–00/5000
20x40 base extrusion Cut to length	D01–7–02–02/…
Extra machining	Pages 57–61

20x40 face extrusion type D02–8

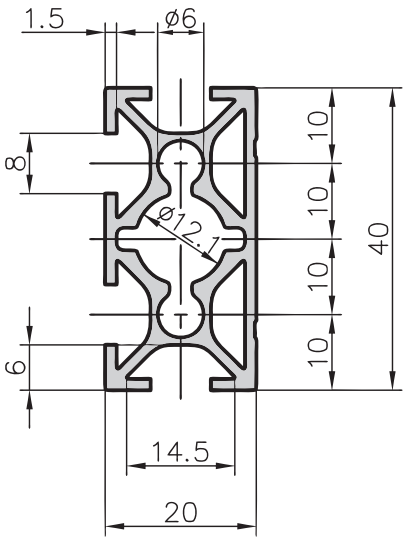

Application
A multi purpose extrusion, which is easily compatible with the base 40. The center hole is Ø12.1 so that the bigger connectors can also be used, making application possibilities even more versatile.

Technical data		
Ix	=	4.15 cm^4
Iy	=	1.26 cm^4
Wx	=	2.07 cm^3
Wy	=	1.18 cm^3
Cross-section area	=	2.79 cm^2
Weight	=	0.75 kg/m

Order data	Order number
20x40 face extrusion Standard length 5000 mm	D02–8–00/5000
20x40 face extrusion Cut to length	D02–8–02–02/…
Extra machining	Pages 57–61

Face extrusion 20x50 type D02–5

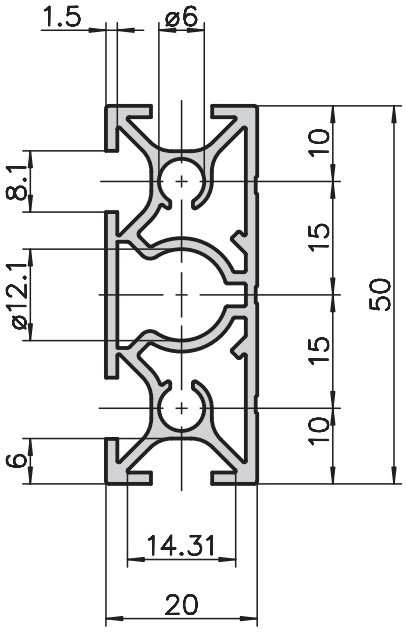

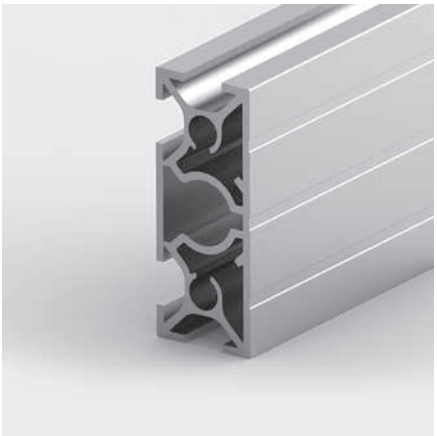

Application

With this combination extrusion 20x50mm, the 20 series extrusion cross-sections can be easily connected to the 50 series ones. The large centre allows a connector of the 20 base with ø12.1 to be fitted

Technical data		
Ix	=	7.71 cm^4
Iy	=	1.58 cm^4
Wx	=	3.08 cm^3
Wy	=	1.58 cm^3
Cross-section area	=	3.25 cm^2
Weight	=	0.88 kg/m

Order data	Order number
Face extrusion 20x50mm Standard length 5000 mm	D02–5–00/5000
Face extrusion 20x50mm Cut to length	D02–5–02–02/…
Extra machining	Pages 57–61

Face extrusion 20x100 type D02–1

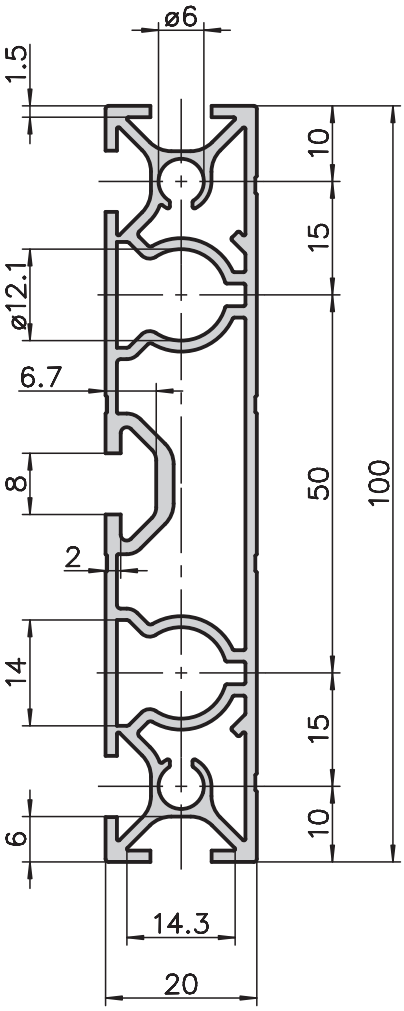

Application

This 20x100mm extrusion is lightweight and nevertheless very sturdy when positioned on its edge. Used in the construction of apparatus racks if closed faces are required. Can also be used as skirting boards along passages.

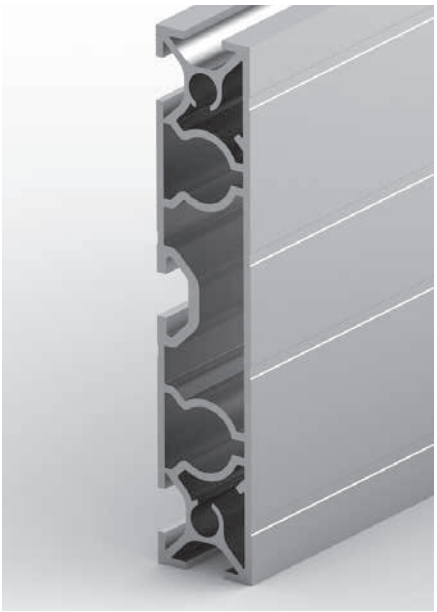

Technical data		
Ix	=	55.5 cm^4
Iy	=	3.01 cm^4
Wx	=	11.1 cm^3
Wy	=	3.01 cm^3
Cross-section area	=	5.7 cm^2
Weight	=	1.55 kg/m

Order data	Order number
Face extrusion 20x100 Standard length 5000 mm	D02–1–00/5000
Face extrusion 20x100 Cut to length	D02–1–02–02/…
Extra machining	Pages 57–61

Our range also includes special cross-sections for accessories or aluminium extrusions for construction kits. From slot extrusions to angle extrusions and 19” extrusions, we can provide rods or blank cuts.

These special cross-sections are illustrated on the following pages along with the measurement data.

Some of these extrusions are stocked as raw since we finish them ourselves into accessories and they are only anodised afterwards.

If requested by the customer, we also produce special accessories from our extrusions.

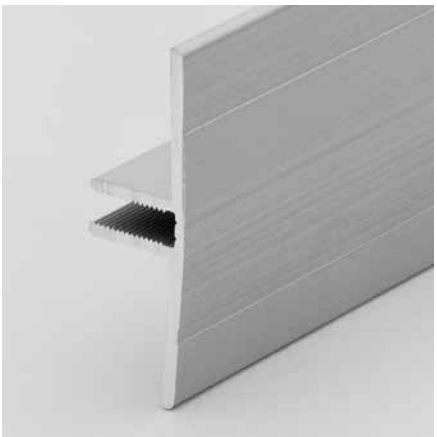

Wall rail 18x50 type A19–9

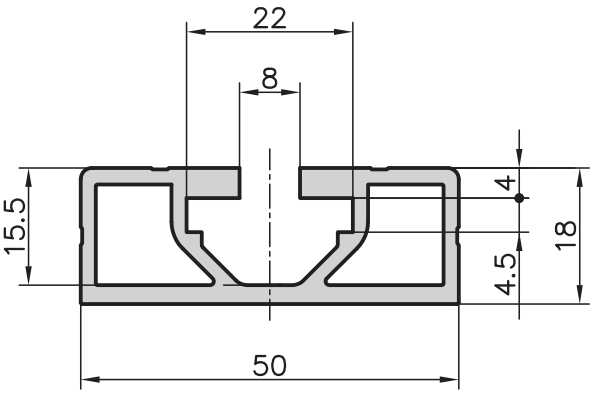

Application

This is a very slim extrusion. When screwed to walls, it provides an easy method of fixing adjustable shelves.

Technical data		
Cross-section area	=	3.47 cm^2
Weight	=	0.9 kg/m

Order data	Order number
Wall rail 18x50 Standard length 5000 mm	A19–9–00/5000
Wall rail 18x50 Cut to length	A19–9–02–02/…

Slot extrusion 16x40 type C08–1

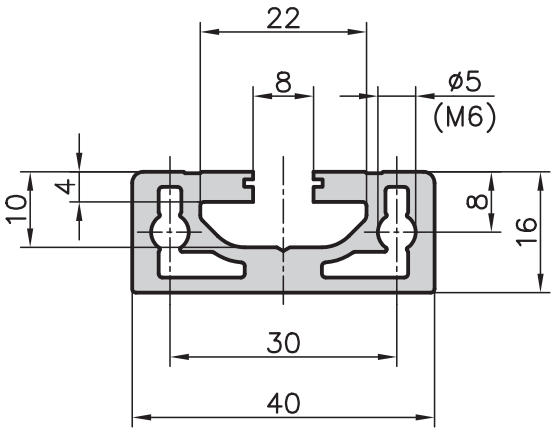

Application

A robust rail with the slot geometry of the 40 base. The slot base is solid in order to accommodate the thread holes. When fixed to walls with dowels, height adjustable shelves can be very easily attached to this extrusion rail.

Technical data		
Cross-section area	=	3.55 cm^2
Weight	=	1.0 kg/m

Order data	Order number
Slot extrusion 16x40 Standard length 5000 mm	C08–1–00/5000
Slot extrusion 16x40 Cut to length	C08–1–02–02/…

20x80 slot extrusion type C08–2

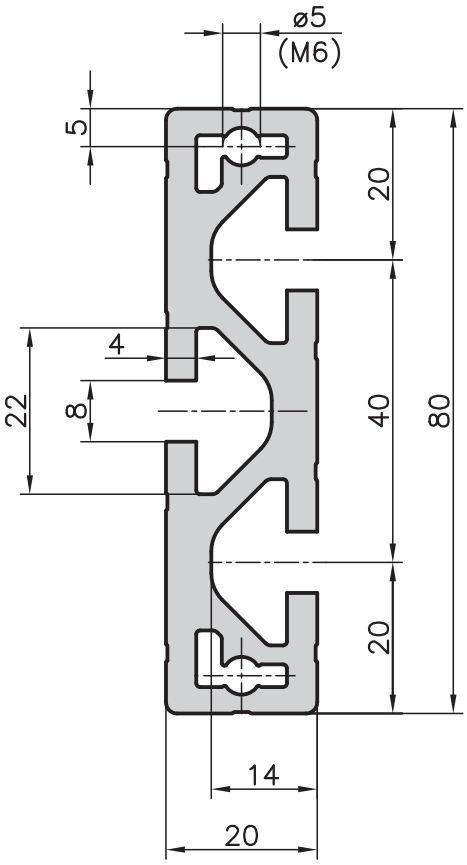

Application

These slot extrusions are very versatile and can be used as a floor or adapter-plate, for heavy duty guidance, distance-holder as well as for fixing plates, etc.

20x120 slot extrusion type C08–3

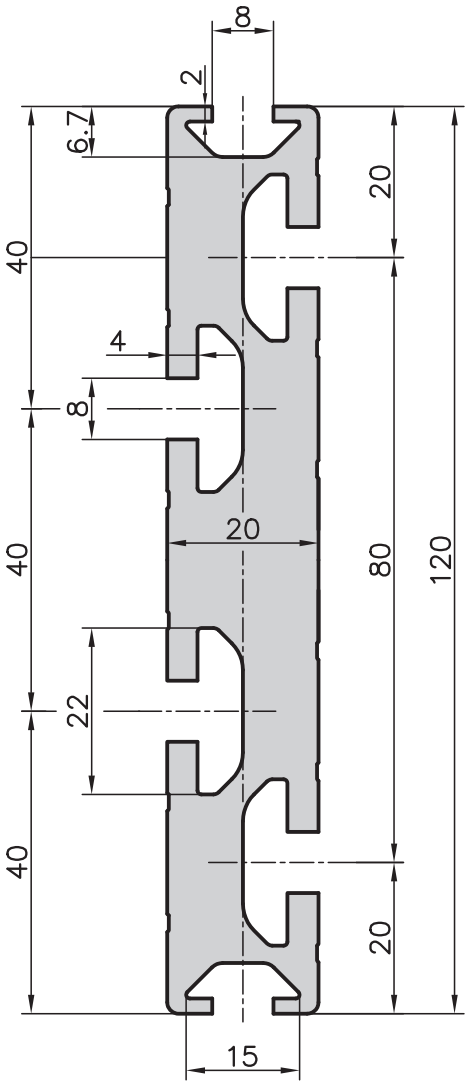

Technical data		
Ix	=	54.49 cm^4
Iy	=	3.97 cm^4
Wx	=	13.62 cm^3
Wy	=	3.97 cm^3
Cross-section area	=	8.90 cm^2
Weight	=	2.4 kg/m

Order data	Order number
20x80 slot extrusion Standard length 5000 mm	C08–2–00/5000
20x80 slot extrusion Cut to length	C08–2–02–02/…

Technical data		
Ix	=	177.95 cm^4
Iy	=	6.31 cm^4
Wx	=	29.66 cm^3
Wy	=	6.31 cm^3
Cross-section area	=	16.40 cm^2
Weight	=	4.42 kg/m

Order data	Order number
20x120 slot extrusion Standard length 5000 mm	C08–3–00/5000
20x120 slot extrusion Cut to length	C08–3–02–02/…

30x15 triple channel extrusion type B05–1

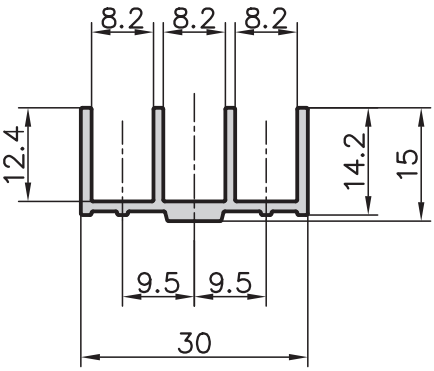

Application

A screw-on extrusion which is ideal for inserting panels, glazing and sliding doors, or any application requiring an attractive finish with functional reliability. The triple channel extrusion can slide onto standard extrusions with the base 30 mm.

The plastic extrusions B39–55 and B39–35 can be used to improve the sliding properties, to reduce the size of the slots or as clip-on covers.

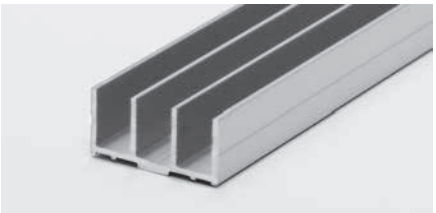

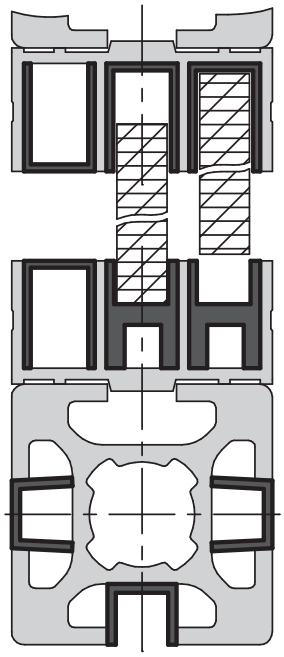

Technical data		
Cross-section area	=	1.18 cm^2
Weight	=	0.32 kg/m

Order data	Order number
30x15 triple channel extrusion Standard length 5000 mm	B05–1–00/5000
30x15 triple channel extrusion Cut to length	B05–1–02–02/…

50x50 hand rail extrusion type A19–1

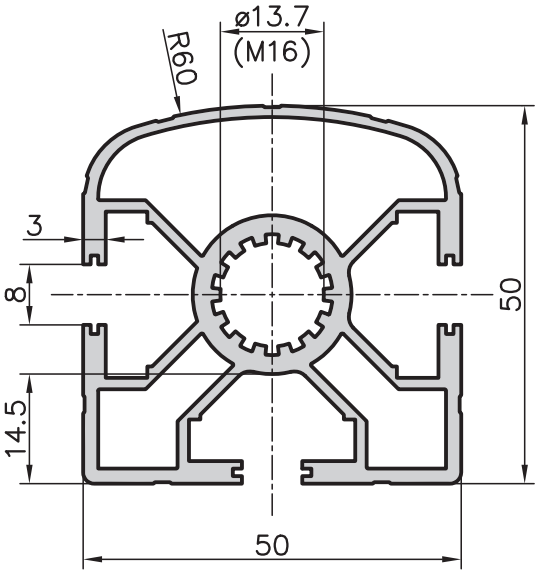

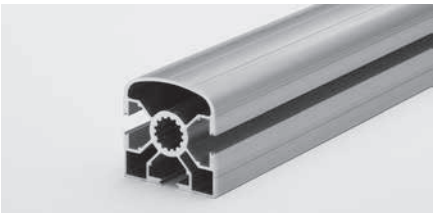

Application

Hand rail extrusion for staircase railings or fence tops.

Technical data		
Ix	=	13.00 cm^4
Iy	=	15.00 cm^4
Wx	=	5.20 cm^3
Wy	=	6.00 cm^3
Cross-section area	=	6.10 cm^2
Weight	=	1.65 kg/m

Order data	Order number
50x50 hand rail extrusion Standard length 5000 mm	A19–1–00/5000
50x50 hand rail extrusion Cut to length	A19–1–02–02/…
Extra machining	Pages 57–61

19" auxiliary extrusion type A05–2

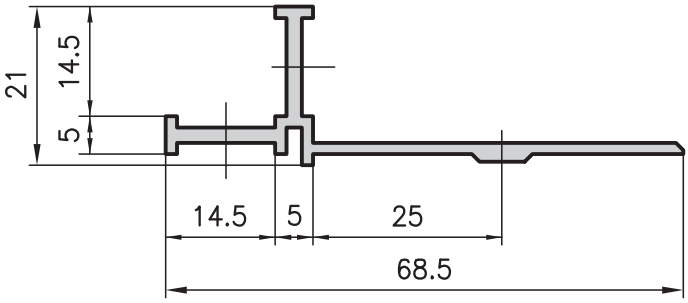

19" auxiliary extrusion type B05–2

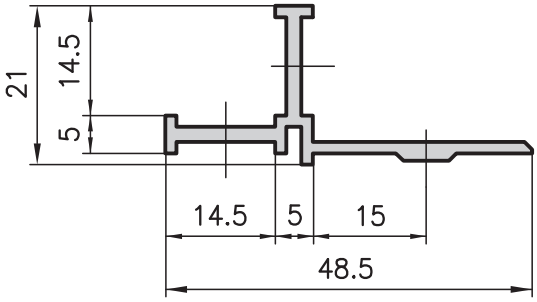

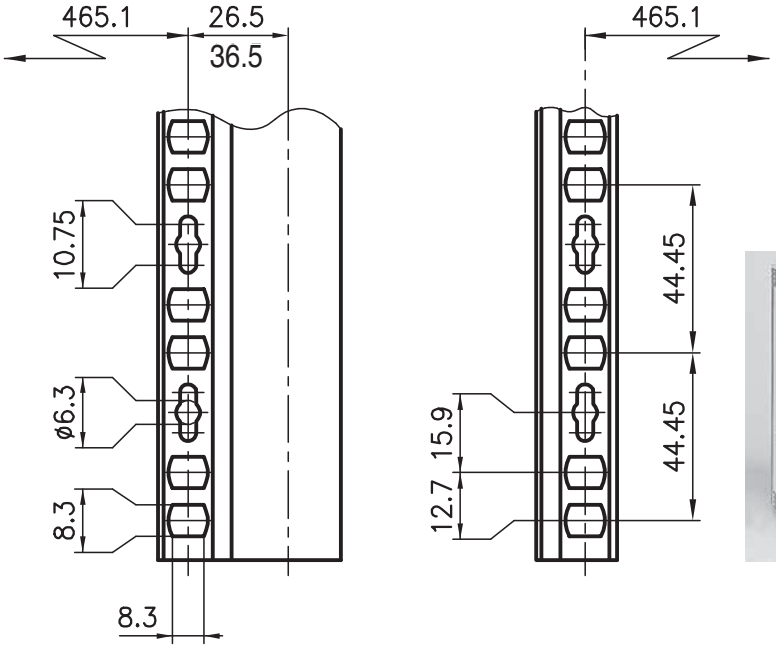

Application

The screw-on extrusion allows 19'' racking to be incorporated into electronic, pneumatic and hydraulic applications. This specially punched rail can be bolted onto any standard design extrusion with a base of 50 or 30 mm. It meets the requirements of IEC297. Equipment is easy to install using M6 nuts and retaining clips.

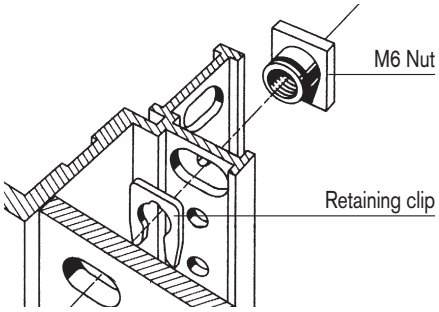

Technical data		
Cross-section area	=	1.67 cm^2
Weight	=	0.5 kg/m

Order data	Order number
19" auxiliary extrusion Standard length 5000 mm	A05–2–00/5000
19" auxiliary extrusion Cut to length	A05–2–02–02/…

Order data	Order number
Retaining clip	H2–506
Special M6 nut	H2–504

Technical data		
Cross-section area	=	1.37 cm^2
Weight	=	0.4 kg/m

Order data	Order number
19" auxiliary extrusion Standard length 5000 mm	B05–2–00/5000
19" auxiliary extrusion Cut to length	B05–2–02–02/…

30x95 box frame extrusion type B01–7

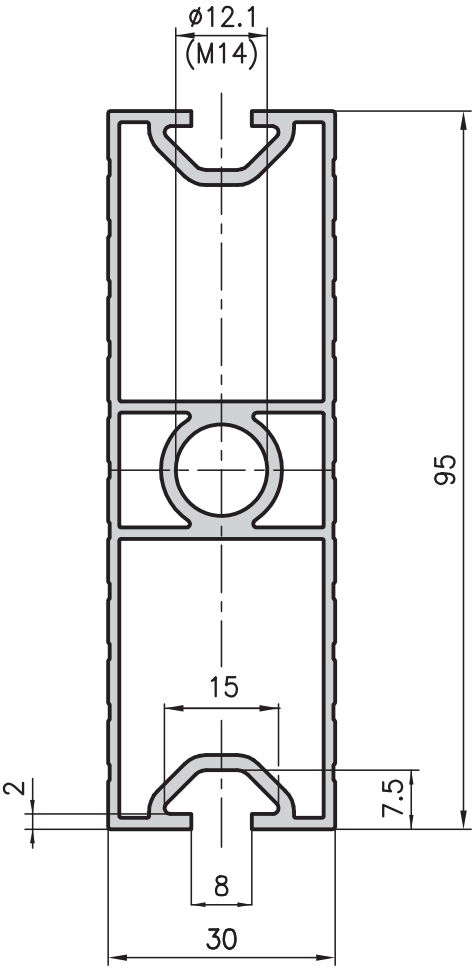

Application

The basic material for the single and double wheeled runner (see page 172). However, it can also be used as a frame extrusion to hold thick panels in place.

Technical data		
Ix	=	55.99 cm^4
Iy	=	7.94 cm^4
Wx	=	11.79 cm^3
Wy	=	5.29 cm^3
Cross-section area	=	6.54 cm^2
Weight	=	1.8 kg/m

Order data	Order number
30x95 box frame extrusion Standard length 5850 mm	B01–7–00/5000
30x95 box frame extrusion Cut to length	B01–7–02–02/…
Extra machining	Pages 57–61

30x50 runner extrusion type B10–9

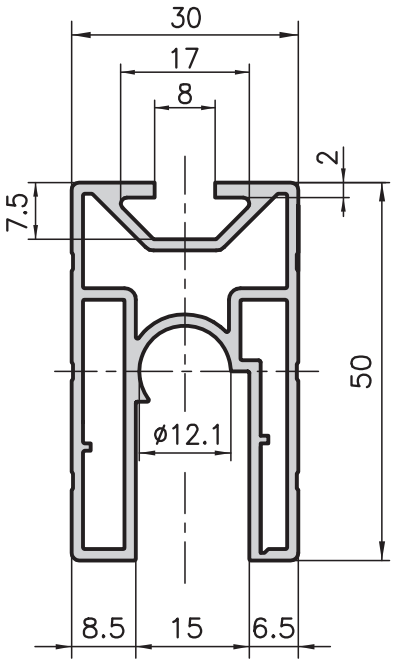

Technical data		
Ix	=	9.17 cm^4
Iy	=	4.51 cm^4
Wx	=	3.37 cm^3
Wy	=	2.98 cm^3
Cross-section area	=	3.94 cm^2
Weight	=	1.1 kg/m

Order data	Order number
30x50 runner extrusion Standard length 5000 mm	B10–9–00/5000
30x50 runner extrusion Cut to length	B10-9–02–02/…
Extra machining	Pages 57–61

20x40 box frame extrusion type D01–6

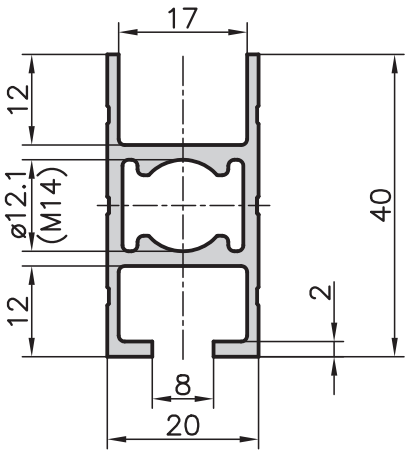

Application
Developed specially for the construction of exhibition stands. Designed to hold 16 mm particle board panels at one end and 6/8 mm panels at the other end.

Technical data		
Ix	=	2.60 cm^4
Iy	=	1.38 cm^4
Wx	=	1.21 cm^3
Wy	=	1.38 cm^3
Cross-section area	=	2.39 cm^2
Weight	=	0.7 kg/m

Order data	Order number
20x40 box frame extrusion Standard length 5000 mm	D01–6–00/5000
20x40 box frame extrusion Cut to length	D01–6–02–02/…
Extra machining	Pages 57–61

30 mm base octagonal extrusion type B15–3

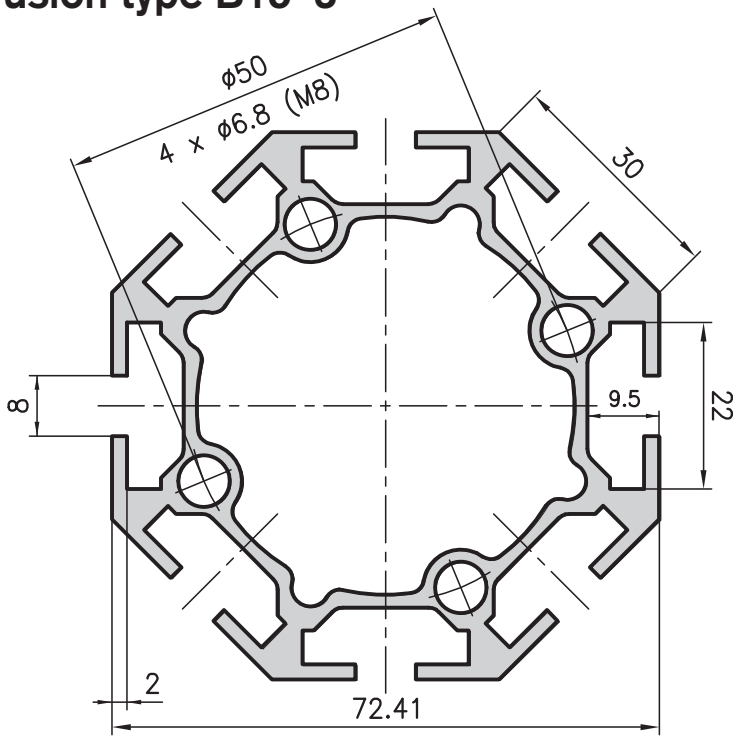

Application
Ideal for large, heavy duty machine enclosures in a round design, and as an axial extrusion for rotating structures. It can also have base plates bolted on and be used as a support extrusion.
An elegant extrusion for interior decoration such as tables, carriages, etc.

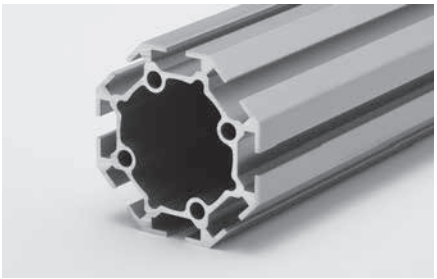

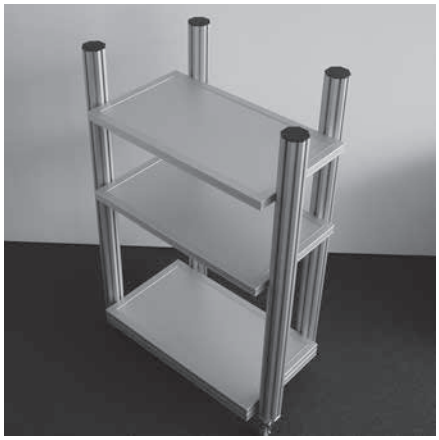

Technical data		
Ix,y	=	51.01 cm^4
Wx,y	=	14.09 cm^3
Cross-section area	=	10.30 cm^2
Weight	=	2.8 kg/m

Order data	Order number
30 mm base octagonal extrusion Standard length 5000 mm	B15–3–00/5000
30 mm base octagonal extrusion Cut to length	B15–3–02–02/…
Extra machining	Pages 57–61

16x29 clamping extrusion type A05–6

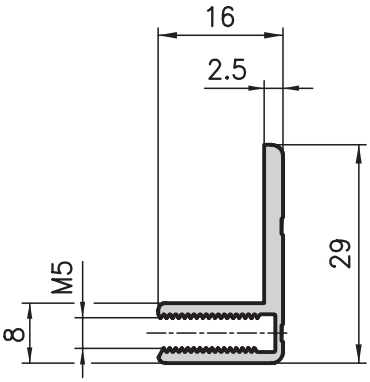

Application

Two ingenious extrusions to clamp panels of all kinds. They can be added to any existing 8 mm slots on extrusions base 40, 45 or 50 mm. Panels can be inserted or replaced easily, on one or two of the sides, without any need to dismantle the supporting structure!

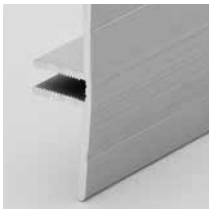

Technical data		
Cross-section area	=	1.18 cm²
Weight	=	0.32 kg/m

Order data	Order number
16x29 clamping extrusion Standard length 5000 mm	A05–6–00/5000
16x29 clamping extrusion Cut to length	A05–6–02–02/…

16x50 double clamping extrusion type A05–7

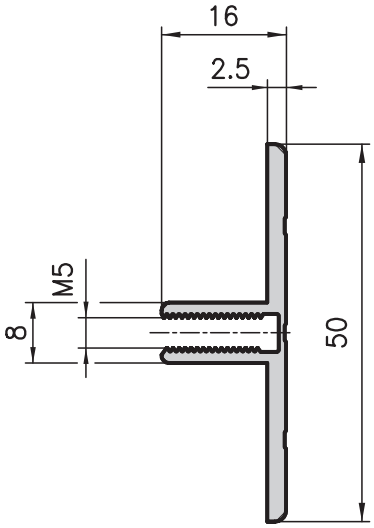

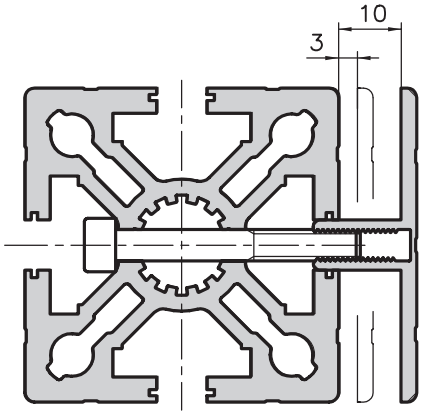

Technical data		
Cross-section area	=	1.70 cm²
Weight	=	0.46 kg/m

Order data	Order number
16x50 double clamping extrusion Standard length 5000 mm	A05–7–00/5000
16x50 double clamping extrusion Cut to length	A05–7–02–02/…

Panel clamp extrusions type A05–8/C05–8

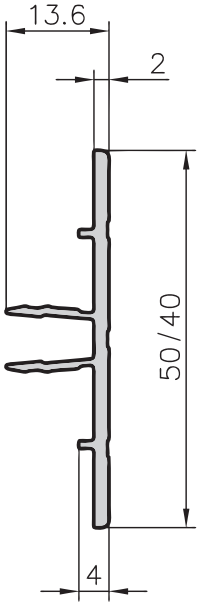

Application

Similar to the clamping extrusion but with the additional benefit, that this extrusion can be clipped in. Ideal for ALUCOBOND- and DIBOND- panels or other sheets with a thickness of 2mm and respectively 4 mm (2 snap-in positions for clamping!)

Technical data		
Cross-section area	=	1.26 cm²
Weight	=	0.34 kg/m

Order data	Order number
13.5x50 panel clamp extrusion Standard length 6000 mm	A05–8–00/6000
13.5x50 panel clamp extrusion Cut to length	A05–8–02–02/…
13.6x40 panel clamp extrusion Standard length 6000 mm	C05–8–00/6000
13.6x40 panel clamp extrusion Cut to length	C05–8–02–02/…

8x13.5 U-clamping extrusion type B19–6

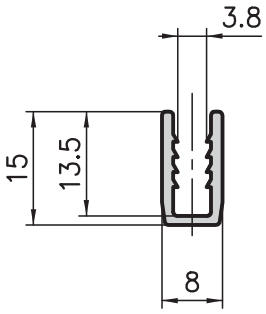

Application
A special extrusion for clamping the wire mesh. The U-extrusion fits into all extrusions with a base of 50, 45, 40 and 30 mm.

Technical data		
Cross-section area	=	0.53 cm²
Weight	=	0.14 kg/m

Order data	Order number
8x13.5 U-clamping extrusion	
Standard length 5000 mm	B19–6–00/5000
8x13.5 U-clamping extrusion	
Cut to length	B19–6–02–02/…

11x30.5 support extrusion type B19–7

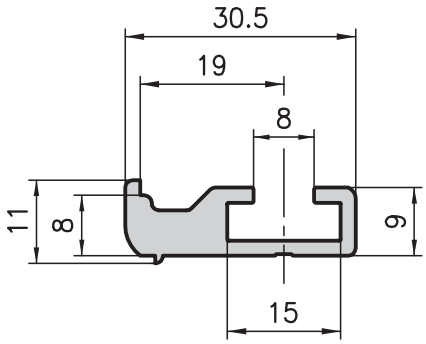

Application
The support extrusion is twisted into the 8 mm slots on the standard design extrusions and is used to support table tops, shelves, panels, etc.

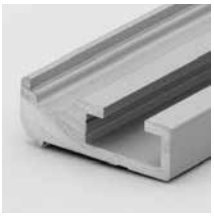

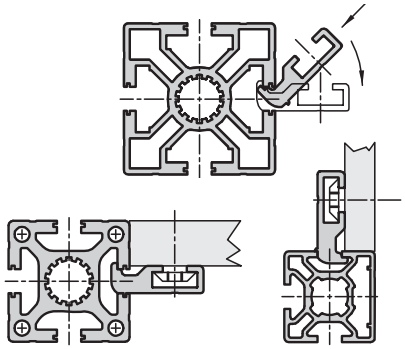

Technical data		
Cross-section area	=	1.62 cm²
Weight	=	0.44 kg/m

Order data	Order number
11x30.5 stop extrusion	
Standard length 5000 mm	B19–7–00/5000
11x30.5 stop extrusion	
Cut to length	B19–7–02–02/…

Aluminium guide extrusion type B19–8

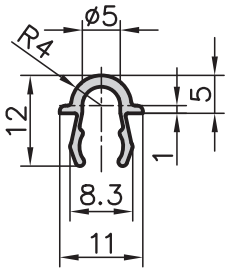

Application
This aluminium guide can be easily clipped into all slots of Base 50/45/40/30. With 30 base extrusions, a snap-in function prevents the guide from falling out. With 50/40 base extrusions, the guide is jammed in the slot. If necessary, a steel pin Ø 6 can also be pressed in on the side which prevents any possible movement of the guide. Advantages of this guide are:
- Quick and easy fitting, and inexpensive
- Closed slots reduce the build up of dirt
- Can be retrofitted at any time onto existing structures

Sliding doors are so easy and inexpensive to produce. Used especially in applications where the build up of dirt in an open slot or guide is to be prevented.

This extrusion is primarily used as a running rail for the concave roller.

Wheeled runner, see Page 172

Order data	Order number
Aluminium guide extrusion	
Standard length 5000 mm	B19–8–00/5000
Cut to length	B19–8–02–02/…

Angle extrusion type A30–0/C30–0

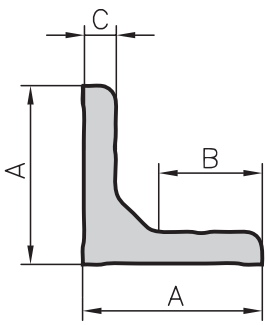

Measurement data

Typ	A	B	C
A30–0	38	21	8
C30–0	31	17	6

Technical dat

		A30–0	C30–0
Cross-section area	=	5.52 cm²	3.46 cm²
Weight	=	1.49 kg/m	0.94 kg/m

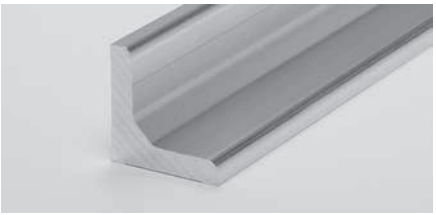

Order data	Order number
38x38 angle extrusion raw Standard length 3000 mm	A30–0–00/3000
38x38 angle extrusion raw Cut to length	A30–0–02–02/…
31x31 angle extrusion raw Standard length 3000 mm	C30–0–00/3000
31x31 angle extrusion raw Cut to length	C30–0–02–02/…

Angle extrusion type A30–5

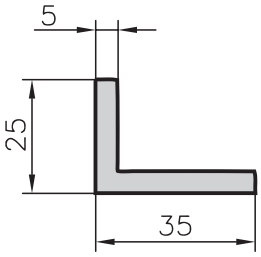

Application
Source material for mounting and fixing brackets or as support bracket.

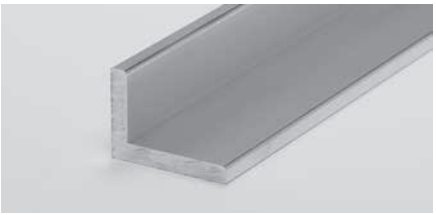

Technical data

Cross-section area	=	2.74 cm²
Weight	=	0.74 kg/m

Order data	Order number
25x35 angle extrusion raw Standard length 5000 mm	A30–5–00/5000
25x35 angle extrusion raw Cut to length	A30–5–02–02/…

Angle extrusion type A47–0

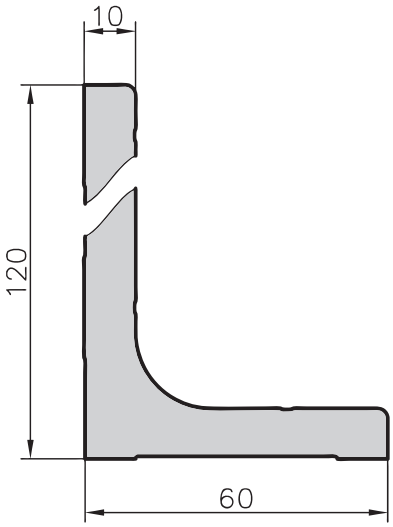

Application
Source material for floor bolting brackets or for reinforcements.

Technical data

Cross-section area	=	17.15 cm²
Weight	=	4.63 kg/m

Order data	Order number
60x120 angle extrusion raw Standard length 3600 mm	A47–0–00/3600
60x120 angle extrusion raw Cut to length	A47–0–02–02/…

Angle extrusion type A30–3

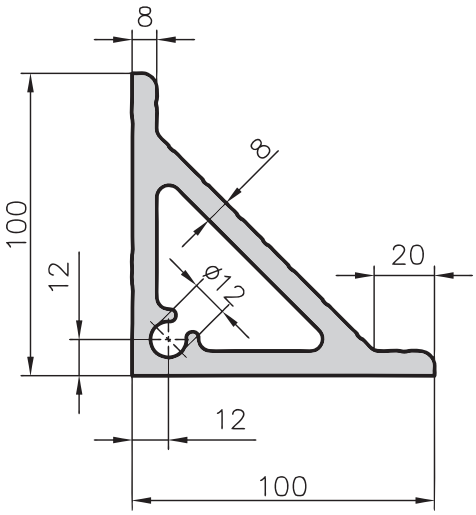

Angle extrusion type C30–3

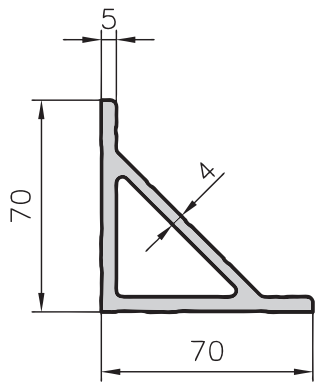

Angle extrusion type A30–2

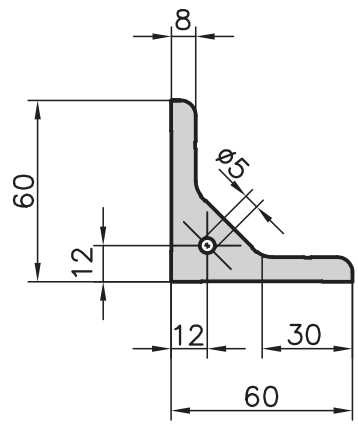

Application
These very strong angle extrusions are the source material for the mounting brackets. They're also used to reinforce heavily loaded constructions.

Technical data		
Cross-section area	=	23.63 cm^2
Weight	=	6.38 kg/m

Order data	Order number
100x100 angle extrusion raw Standard length 3000 mm	A30–3–00/3000
100x100 angle extrusion raw Cut to length	A30–3–02–02/…

Technical data		
Cross-section area	=	9.23 cm^2
Weight	=	2.49 kg/m

Order data	Order number
70x70 angle extrusion raw Standard length 3000 mm	C30–3–00/3000
70x70 angle extrusion raw Cut to length	C30–3–02–02/…

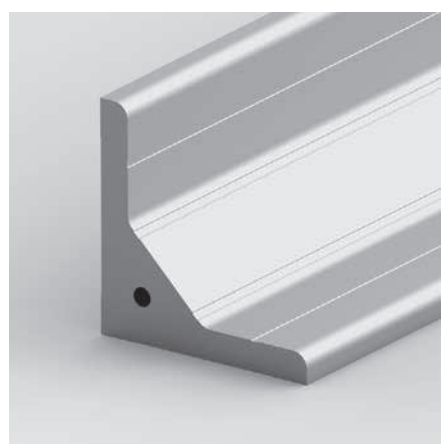

Technical data		
Cross-section area	=	10.15 cm^2
Weight	=	2.75 kg/m

Order data	Order number
60x60 angle extrusion raw Standard length 3000 mm	A30–2–00/3000
60x60 angle extrusion raw Cut to length	A30–2–02–02/…

Angle extrusion
Type E30–3

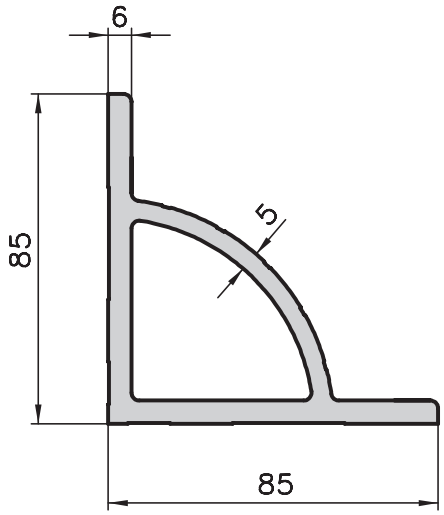

Application
This angle extrusion is the starting material for mounting brackets for the base 45 products. The support arch with the Kanya shadow slots appears very elegant.

Technical data		
Cross-section area	=	13.44 cm²
Weight	=	3.70 kg/m

Order data	Order number
Angle extrusion raw 85x85 Standard length 3000 mm	E30–3–00/3000
Angle extrusion raw 85x85 Cut to length	E30–3–02–02/…

Hinge extrusion type A60–6/C60–6

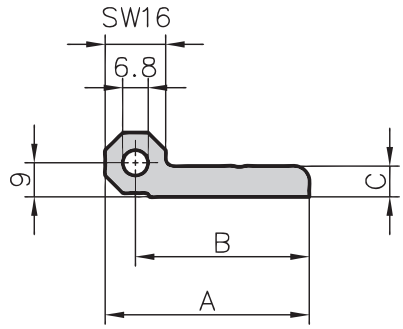

Measurement data

Typ	A	B	C
A60–6	54	46	8
C60–6	44	36	8

Application
Source material for the unhingable and the heavy duty hinges or for producing special hinges.

Specification
Aluminium raw

Technical data

		A60–6	C60–6
Cross section area	=	4.91 cm^2	4.11 cm^2
Weight	=	1.33 kg/m	1.11 kg/m

Order data	Order number
17x54 hinge extrusion Standard length 3000 mm	A60–6–00/3000
17x54 hinge extrusion Cut to length	A60–6–02–02/…
17x44 hinge extrusion Standard length 3000 mm	C60–6–00/3000
17x44 hinge extrusion Cut to length	C60–6–02–02/…

Hinge extrusion type A60–5

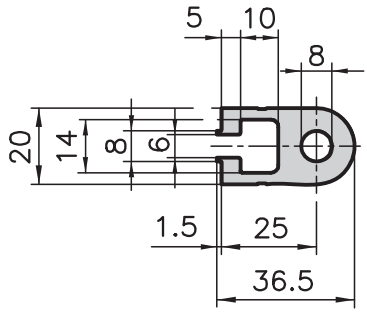

Application
Source material for special hinges or as bearing for simple rotating-mechanism.

Specification
Aluminium anodised

Technical data

Cross-section area	=	4.40 cm^2
Weight	=	1.19 kg/m

Order data	Order number
20x36.5 hinge extrusion Standard length 5000 mm	A60–5–00/5000
20x36.5 hinge extrusion Cut to length	A60–5–02–02/…

Handle strip extrusion type B65–5

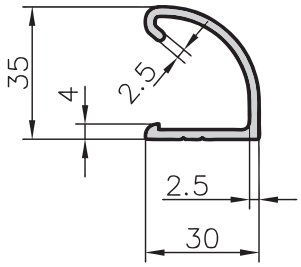

Application
Source material for handle strips or handles with special-length.

Specification
Aluminium anodised

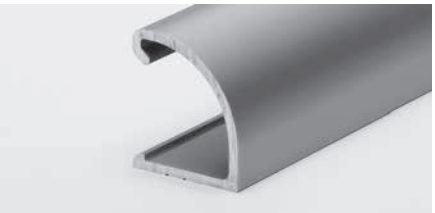

Technical data

Cross-section area	=	2.18 cm^2
Weight	=	0.59 kg/m

Order data	Order number
30x35 handle strip extrusion Standard length 5000 mm	B65–5–00/5000
30x35 handle strip extrusion Cut to length	B65–5–02–02/…

Clamping blocks

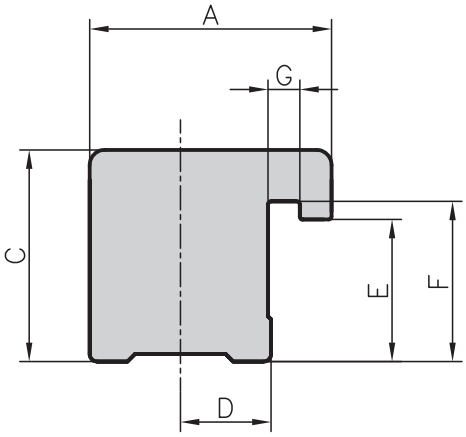

Application

To connect two extrusions of base 50, 40 and 30. A very sturdy cross or parallel connection is produced. Two clamping blocks are required to create the parallel connection.

Clamping blocks machined, see page 155

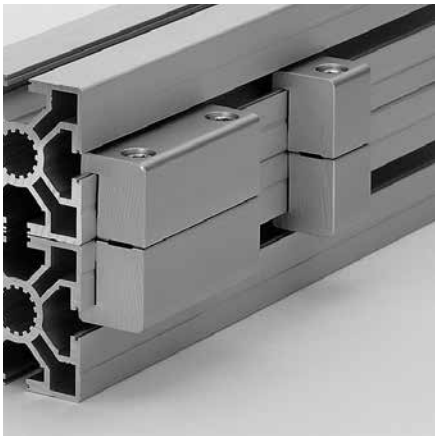

Measurement data

Type	A	C	D	E	F	G	kg/m
30	17	15	6.5	9.4	10.6	2.1	0.51
40	25	22	10	14.4	15.6	4	1.31
50	25	27	10	19.4	20.6	4	1.58

Order data	Order number
Raw block extrusion	
Base 50 extrusions	
Standard length 3000 mm	A34–0–00/3000
Cut to length	A34–0–02–02/4
Base 40 extrusions	
Standard length 3000 mm	C34–0–00/3000
Cut to length	C34–0–02–02/…
Base 30 extrusions	
Standard length 3000 mm	B34–0–00/3000
Cut to length	B34–0–02–02/…

55x55 rectangular tube type A19–5

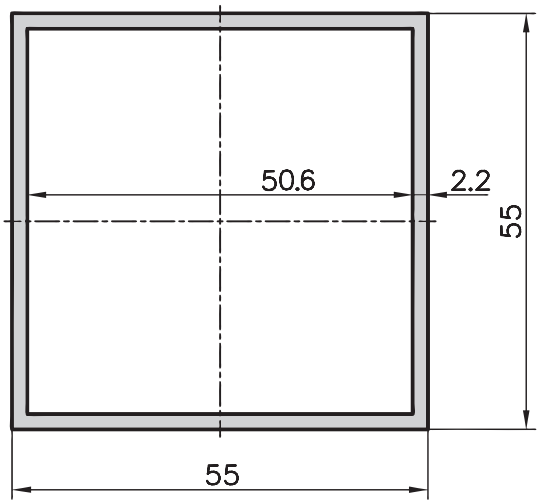

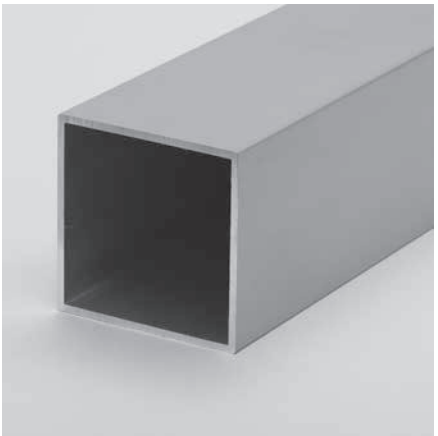

Application
With the rectangular tube and with the combination of a 50x50 extrusion a telescope function can be easily created.
Can also be used as a guidance for a counter balance in a construction with a lift gate in addition to many «classic» rectangular tube applications.

Technical data		
Ix,y	=	21.58 cm^4
Wx,y	=	7.85 cm^3
Cross-section area	=	4.64 cm^2
Weight	=	1.25 kg/m

Order data	Order number
55x55 rectangular tube Standard length 6000mm	A19–5–01/6000
55x55 rectangular tube Cut to length	A19–5–02–02/….

Counterweight extrusion 50x100 type A19–2

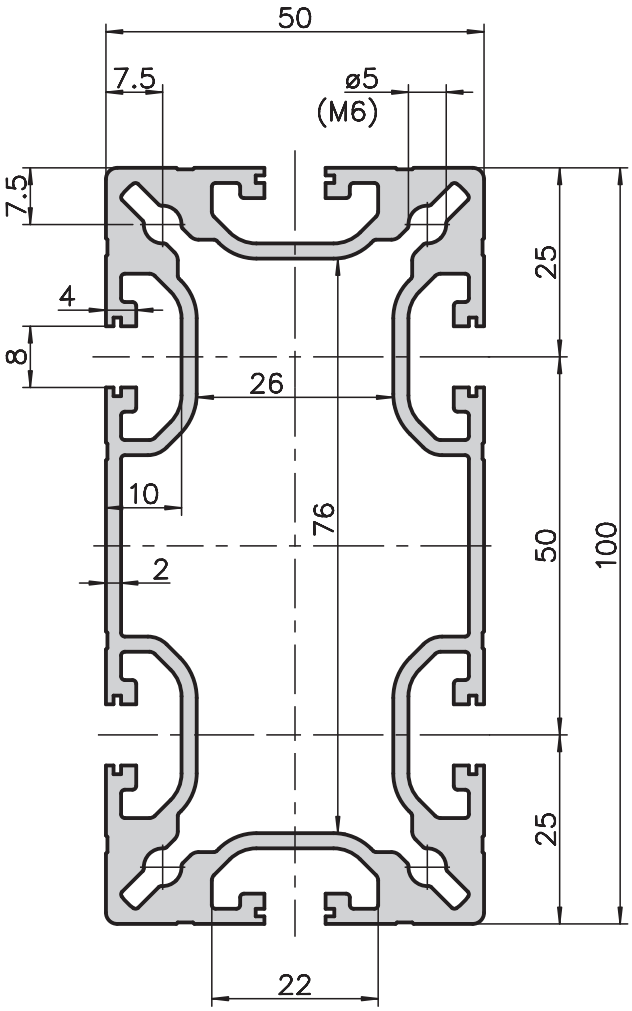

Application

Counterweights can be inserted into this extrusion for vertical sliding doors. This is a combination extrusion of base 40 + 50. The slots are based on the geometry of base 40 which is why base 40 accessories are the most suitable to use.

This extrusion can be connected to the PVSDirect (page 149).

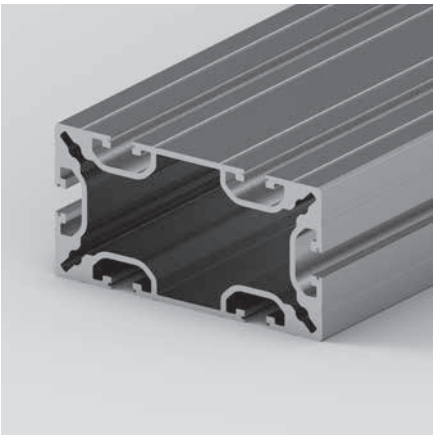

Technical data		
Ix	=	41.82 cm^4
Iy	=	16.43 cm^4
Wx	=	8.36 cm^3
Wy	=	6.57 cm^3
Cross-section area	=	12.33 cm^2
Weight	=	3.33 kg/m

Order data	Order number
Counterweight extrusion 50x100	
Standard length 6000mm	A19–2–01/6000
Cut to length	A19–2–02–02/…

Also available, a special «PVS® screw safe». For safety casings or covers which must not be removable using a standard Allen key.
(Item No. 125-80-S)

KANYA connection technology: PVS® ORIGINAL

The extrusion connection system **PVS®** opens up new possibilities for all structural design problems, whether for machinery, transfer and handling systems, guards, machine enclosures, work benches, laboratory facilities, cabinets, room partitions or exhibition stands. Rectangular, round, square or diagonal, fixed or swivelling: KANYA is the perfect solution.

Quick, secure connections:

KANYA PVS makes it possible to erect any structure in a very short time. The system centers around KANYA's own invention, the internationally patented PVS connector. Any extrusions can be joined together securely.

Simple and versatile assembly:

The two fundamentals which allow you to build a structure to your own design are ease of assembly and a comprehensive range of extrusions and accessories. Modifications or additions can be easily made, when the need arises, without wasting any material.

Highly cost-effective:

Any part can be customised. There is no need for expensive finishing or surface treatments. Expensive construction is minimised, saving time and reducing costs. All the parts can be reused repeatedly since all joints are simple to dismantle. That's what makes this system the most cost effective you can buy in the long run.

An example of making a simple 90° connection.

All the KANYA PVS connections work on this simple principle, regardless of direction or size.

1. Insert the barrel into the hole made in the second extrusion.

2. Insert the sprung anchor into the centre hole of the barrel.

3. Push the anchor head into the slot of the first extrusion; twist 90°. Tighten the Allen screw. That's all.

PVS® connectors - overview

1. Universal connections

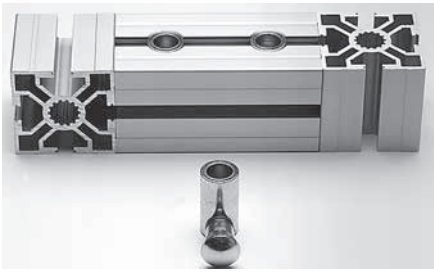

The round anchor head allows the extrusions to be set in any position, however it must first be pushed into the retaining slot. **Also available in stainless steel or providing electrical bonding. (electrically conducting)**

2. Standard connections

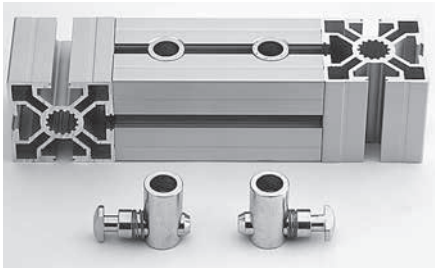

The milled anchor heads allow extrusions to be added subsequently. Horizontally and vertically milled anchor types are required to guarantee that every extrusion position is possible. **Also available in stainless steel or providing electrical bonding. (electrically conducting)**

3. Combination connections

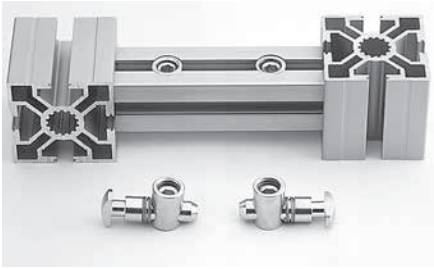

To provide the optimum connection for all cross-sections, the combination connectors are used in a similar way to the standard connection.

4. Special connections

The special anchor, which is available in different lengths, makes parallel and cross connections possible.

5. Mitred connections

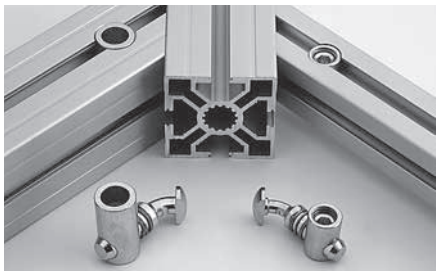

The formed anchor head – 15°, 30° and 45° in both left and right designs – or with an articulated head to create connections at virtually any angle

6. Double mitred connections

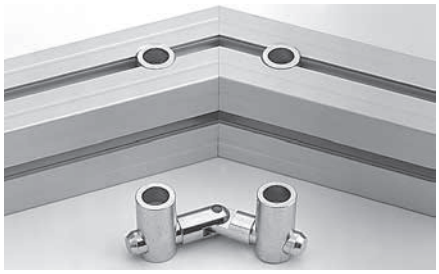

The anchor which can be swivelled from 0° – 90° can be used universally and creates a sturdy frame with slots all around.

7. Extrusion extensions

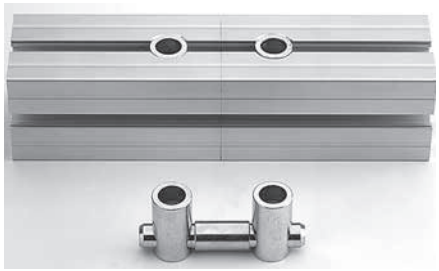

The rigid anchor guarantees an extremely stable extrusion extension

8. Threaded connections

The threaded anchor (M6 / M8) enables the extrusion to be attached to other structures. And the erection of a machine safety guard on an existing work top without any additional fixings.

1. Universal connectors

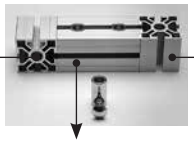

Order number										Order number
20	30	40	45	50	Extrusions with a base of	50	45	40	30	20
				A20–90 (–I/–P)*	**50**	A20–90 (–I/–P)*				
			E20–90 (–I/–P)*	E20–90 (–I/–P)*	**45**	E20–90 (–I/–P)*	E20–90 (–I/–P)*			
		C20–90 (–I/–P)*	C20–90 (–I/–P)*	C20–90 (–I/–P)*	**40**	C20–90 (–I/–P)*	C20–90 (–I/–P)*	C20–90 (–I/–P)*		
	B20–90	B210–90 (–I/–P)*	B210–90 (–I/–P)*	B210–90 (–I/–P)*	**30**	B210–90 (–I/–P)*	B210–90 (–I/–P)*	B210–90 (–I/–P)*	B20–90	
D20–90	D20–90	D210–90 (–I/–P)*	D210–90 (–I/–P)*	D210–90 (–I/–P)*	Core hole **20** 12.1 mm	D210–90 (–I/–P)*	D210–90 (–I/–P)*	D210–90 (–I/–P)*	D20–90	D20–90
DD20–90	DD20–90	DD210–90	DD210–90	DD210–90	Core hole **20** 6.0 mm	DD210–90	DD210–90	DD210–90	DD20–90	DD20–90
				A20–95	**A02–8**	A20–95				
		C20–95		C20–95	**C02–8 / CO3–8**	C20–95		C20–95		
	B20–95	B210–95		B210–95	**B01–8**	B210–95		B210–95	B20–95	

*....-P = universal connectors with electrical bonding *....-I = universal connectors stainless stee 1.4305

2. Standard connectors

Order number										Order number
20	30	40	45	50	Extrusions with a base of	50	45	40	30	20
				A20–10(–I/–P)*	**50**	A20–20(–I/–P)*				
			E20–10(–I/–P)*		**45**		E20–20(–I/–P)*			
		C20–10(–I/–P)*			**40**			C20–20(–I/–P)*		
	B20–10(–I/–P)*				**30**				B20–20(–I/–P)*	
D20–10(–I/–P)*					Core hole **20** 12.1 mm					D20–20(–I/–P)*
DD20–10					Core hole **20** 6.0 mm					DD20–20
				A20–50	**A02–8**	A20–51				
		C20–50			**C02–8 / CO3–8**			C20–51		
	B20–50				**B01–8**				B20–51	

*....-P = universal connectors with electrical bonding *....-I = universal connectors stainless stee 1.4305

3. Combination connectors

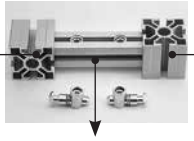

Order number										Order number
20	30	40	45	50	Extrusions with a base of	50	45	40	30	20
AB20–10	AB20–10	A20–10	A20–10		**50**		A20–20	A20–20	AB20–20	AB20–20
EB20–10	EB20–10	E20–10		E20–10	**45**	E20–20		E20–20	EB20–20	EB20–20
CB20–10	CB20–10		C20–10	C20–10	**40**	C20–20	C20–20		CB20–20	CB20–20
B20–10		B210–10	B210–10	B210–10	**30**	B210–20	B210–20	B210–20		B20–20
	D20–10	D210–10	D210–10	D210–10	Core hole **20** 12.1 mm	D210–20	D210–20	D210–20	D20–20	
	DD20–10	DD210–10	DD210–10	DD210–10	Core hole **20** 6.0 mm	DD210–20	DD210–20	DD210–20	DD20–20	
			C20–50	C20–50	**C02–8 / CO3–8**	C20–51	C20–51			
		B210–50	B210–50	B210–50	**B01–8**	B210–51	B210–51	B210–51		

4. Special connectors

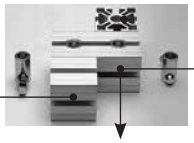

Order number										Order number
20	30	40	45	50	Extrusions with a base of	50	45	40	30	20
AB20–10	AB20–10	A20–10	A20–10	A20–10	**50**	A20–20	A20–10	A20–20	AB20–20	AB20–20
EB20–15	EB20–15	E20–15	E20–15	E20–15	**45**	E20–25	E20–25	E20–25	EB20–25	EB20–25
CB20–15	CB20–15	C20–15	C20–15	C20–15	**40**	C20–25	C20–25	C20–25	CB20–25	CB20–25
B20–15	B20–15	B210–15	B210–15	B210–15	**30**	B210–25	B210–25	B210–25	B20–25	B20–25
		A20–50	A20–50	A20–50	**A02–8**	A20–51	A20–51	A20–51		

5a. Mitre connectors with formed anchor

Order number

20*	20	30	40	45	50
DD221–α	D221–α	B221–α	C22–α	E22–α	A22–α
DD221–α	D221–α	B221–α	C22–α	E22–α	
DD221–α	D221–α	B221–α	C22–α		
DD22–α	D22–α	B22–α			
DD22–α	D22–α				

Extrusions with a base of
50
45
40
30
20

Order number

50	45	40	30	20	20*
A23–α	E23–α	C23–α	B231–α	D231–α	DD231–α
	E23–α	C23–α	B231–α	D231–α	DD231–α
		C23–α	B231–α	D231–α	DD231–α
			B23–α	D23–α	DD23–α
				D23–α	DD23–α

Code α 15° = –15, α 30° = –30, α 45° = –45

*Core hole 6.0 mm

5b. Mitre connectors with an articulated anchor (up to max. 55°)

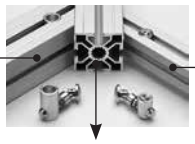

Order number

20	30	40	45	50
D221–00	B221–00	C22–00	E22–00	A22–00
D221–00	B221–00	C22–00	E22–00	
D221–00	B221–00	C22–00		
D22–00	B22–00			
D22–00				

Extrusions with a base of
50
45
40
30
20

Order number

50	45	40	30	20
A22–00	E22–00	C22–00	B221–00	D221–00
	E22–00	C22–00	B221–00	D221–00
		C22–00	B221–00	D221–00
			B22–00	D22–00
				D22–00

5c. Mitred connectors with an formed anchor 90°

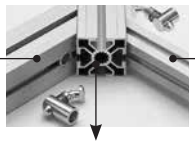

Order number

30	40	45	50
B221–α	C22–α	E22–α	A22–α
B221–α	C22–α	E22–α	
B221–α	C22–α		
B22–α			

Extrusions with a base of
50
45
40
30

Order number

50	45	40	30
A23–α	E23–α	C23–α	B231–α
	E23–α	C23–α	B231–α
		C23–α	B231–α
			B23–α

Code α 15° = –19, α 30° = –39, α 45° = –49

5d. Mitred connectors with an articulated anchor 90°

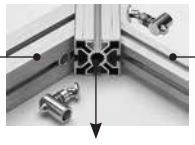

Order number

30	40	45	50
B221–90	C22–90	E22–90	A22–90
B221–90	C22–90	E22–90	
B221–90	C22–90		
B22–90			

Extrusions with a base of
50
45
40
30

Order number

50	45	40	30
A22–90	E22–90	C22–90	B221–90
	E22–90	C22–90	B221–90
		C22–90	B221–90
			B22–90

6. Double mitre connectors

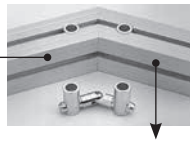

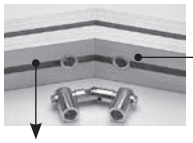

Order number

B01–8	C02–8	A02–8	20*	20	30	40	45	50	Extrusions with a base of
								A24–10	**50**
							E24–10		**45**
						C24–10			**40**
					B24–10				**30**
				D24–10					Core hole **20** 12.1 mm
			DD24–10						Core hole **20** 6.0 mm
		A24–51							**A02–8**
	C24–51								**C02–8 / CO3–8**
B24–51									**B01–8**

Order number

50	45	40	30	20	20*	A02–8	C02–8	B01–8
A24–19								
	E24–19							
		C24–19						
			B24–19					
				D24–19				
					–			
						A24–59		
							C24–59	
								B24–59

*Core hole of 6.0 mm

7. Extrusion extension connectors

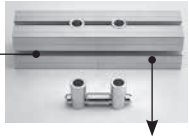

Order number

B01–8	C02–8	A02–8	20*	20	30	40	45	50	Extrusions with a base of
								A24–00	**50**
							E24–00		**45**
						C24–00			**40**
					B24–00				**30**
				D24–00					Core hole **20** 12.1 mm
			DD24–00						Core hole **20** 6.0 mm
		A24–50							**A02–8**
	C24–50								**C02–8 / CO3–8**
B24–50									**B01–8**

*Core hole of 6.0 mm

8. Threaded connectors

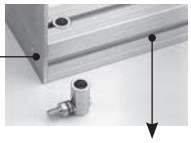

Order number

Thread	M6	M8	A	Extrusions with a base of
	A20–66	A20–60	13	**50**
	E20–66	E20–60	13	**45**
	C20–66	C20–60	13	**40**
	B20–66	B20–60	10	**30**
	D20–66	D20–60	10	Core hole **20** 12.1 mm
	DD20–66		7	Core hole **20** 6.0 mm
	on request	A20–65		**A02–8**
	on request	C20–65		**C02–8 / CO3–8**
	on request	B20–65		**B01–8**

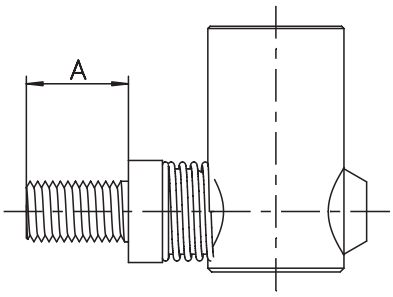

Covering cap for PVS-connector

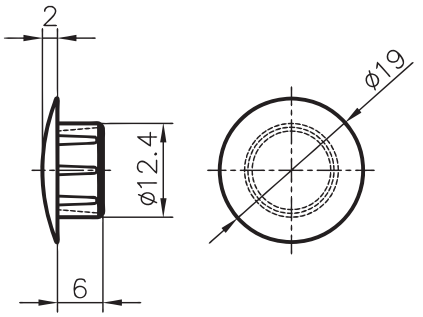

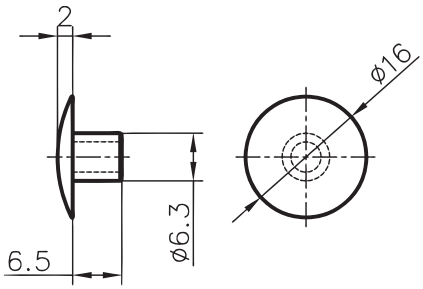

Application
The covering cap for the PVS-connectors have two functions: aesthetics and protection. With the connector on a face side of an extrusion, it covers the visible part of the connector.
If the application is in a dirty environment, it is wise to protect the screws from dirt to allow functionality.

Specification
Material PE, gray

Covering cap

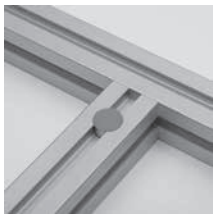

Order data	Order number	
Plastic cap	**grey**	**black**
Base 50 / 45 / 40	A40–99	A40–98
Base 30	B40–99	B40–98

PVS® screw «Safe»

Special PVS® screw Safe M12x12 for safety constructions which must not be easy to dismantle by unauthorised persons. A pin inhibits access to the screw so that it cannot be unscrewed using a commercially available Allen key.

Order data	Order number
PVS® screw Safe	125–80–S

Technical data for aluminium extrusion connectors

Thrusts

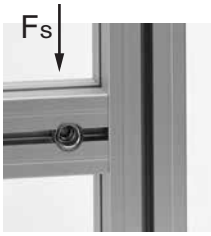

That chart shows the shearing forces in relation to torque and number of connectors of the most important extrusion combinations.
At a torque of 30Nm lies the shearing force for a connection with one connector at approximately 4000N.

Recommended torque: for the universal- and standard connectors:
Extrusion base 50/45/40: 30–35Nm
Extrusion base 30/20 20–25Nm
Extrusion base 20 (Ø6): max. 6Nm
(other connectors on request)

Suggestion:
The tightening torques should not exceed above mentioned recommended specifications: ➪ The anchor head may be damaged or broken.

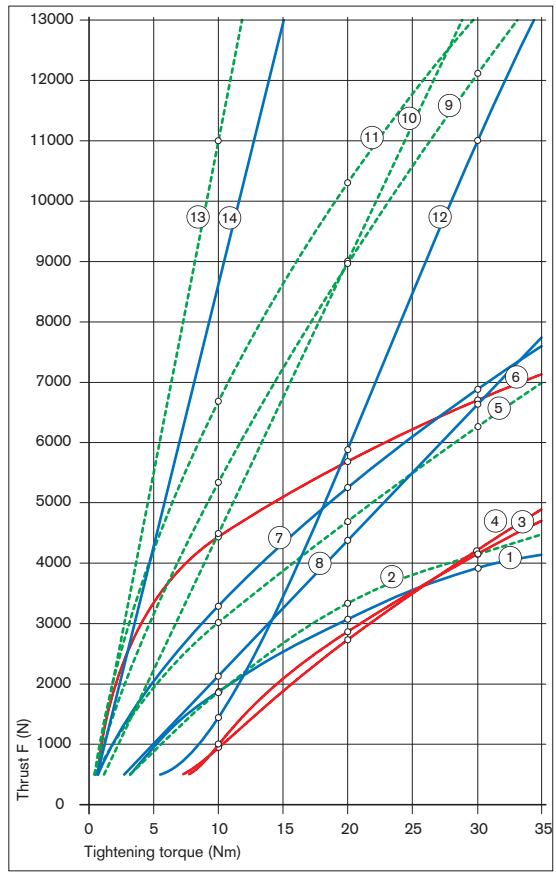

No.	extrusion	joints	
1	50x50	1	———
2	40x40	1	- - - -
3	30x30	1	———
4	30x50	1	———
5	40x80	2	- - - -
6	30x100	2	———
7	50x100	2	———

No.	extrusion	joints	
8	50x150	3	———
9	40x120	3	- - - -
10	80x80	4	- - - -
11	40x160	4	- - - -
12	100x100	4	———
13	80x160	8	- - - -
14	100x200	8	———

Tractive forces

Those in the chart stated tractive forces are approximate value.
Conditions: Preload of connectors with max. torque!

Tractive force Extrusion	Fz Universal connectors	Fz Standard connectors
Base 50	14’000N	10’000N
Base 45	14’000N	10’000N
Base 40	14’000N	10’000N
Base 30	4’000N	3’500N
Base 20	2’000N	1’800N

PVS direct connectors

Base 50

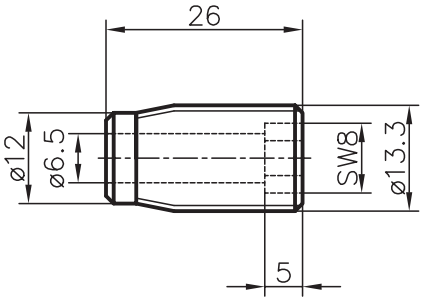

Base 40

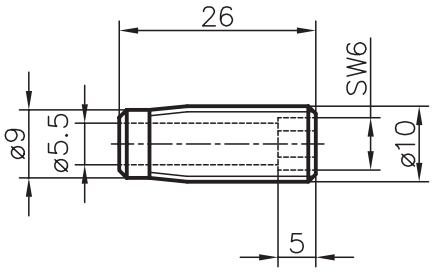

Base 30

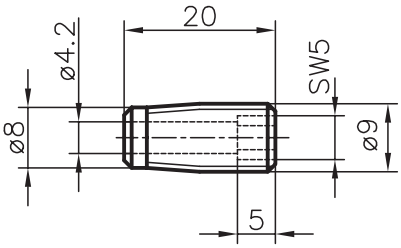

Base 45

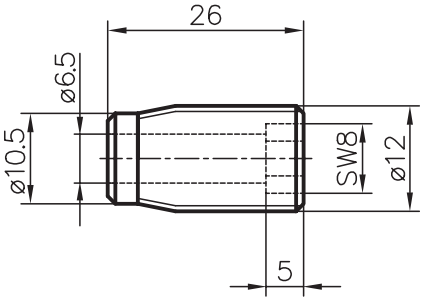

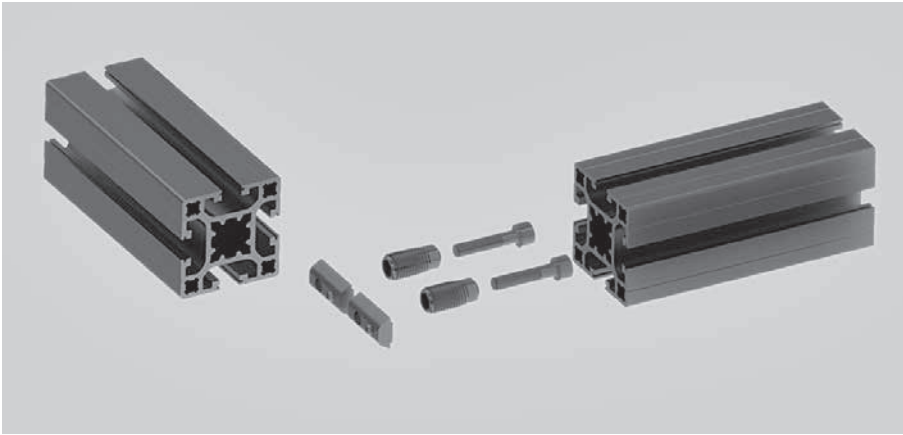

Application

The extrusion does not need to be machined for this connection. This self-cutting threaded sleeve has a shank for an Allen key which is simply used to screw it into the longitudinal slot. The screw is mounted into the threaded sleeve in advance, thereby connecting the extrusion to the extrusion nuts in the counter extrusion. These can be installed afterwards. This stable connection, assembly is slightly more complex than with the PVS standard connector. The prerequisite for this connection is access on both sides to the slots.

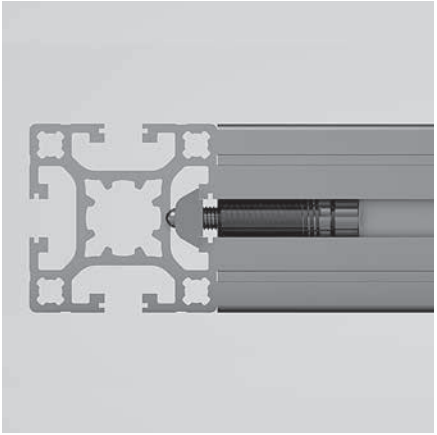

Raccord intégré

Douille taraudée

Note

The side slots are blocked by the connection. Panels would therefore have to be machined the site of the fasteners.

Parts supplied

2 screws
2 threaded sleeves
2 light extrusion nuts

Order data	Order number
Base 50	A33–90
Basis 45	E33–90
Basis 40	C33–90
Basis 30	B33–90

The KANYA connection technology

PVS® SUPERLIGHT

Assembly instructions:

1. Insert the self-cutting threaded insert into the extrusion centre hole (see Page 163).
2. Drill a stepped hole into the extrusion
3. Tighten the socket-head cap screw – that‘s all there is to it.

For a lateral connection, you can also use an extrusion nut or a threaded plate.

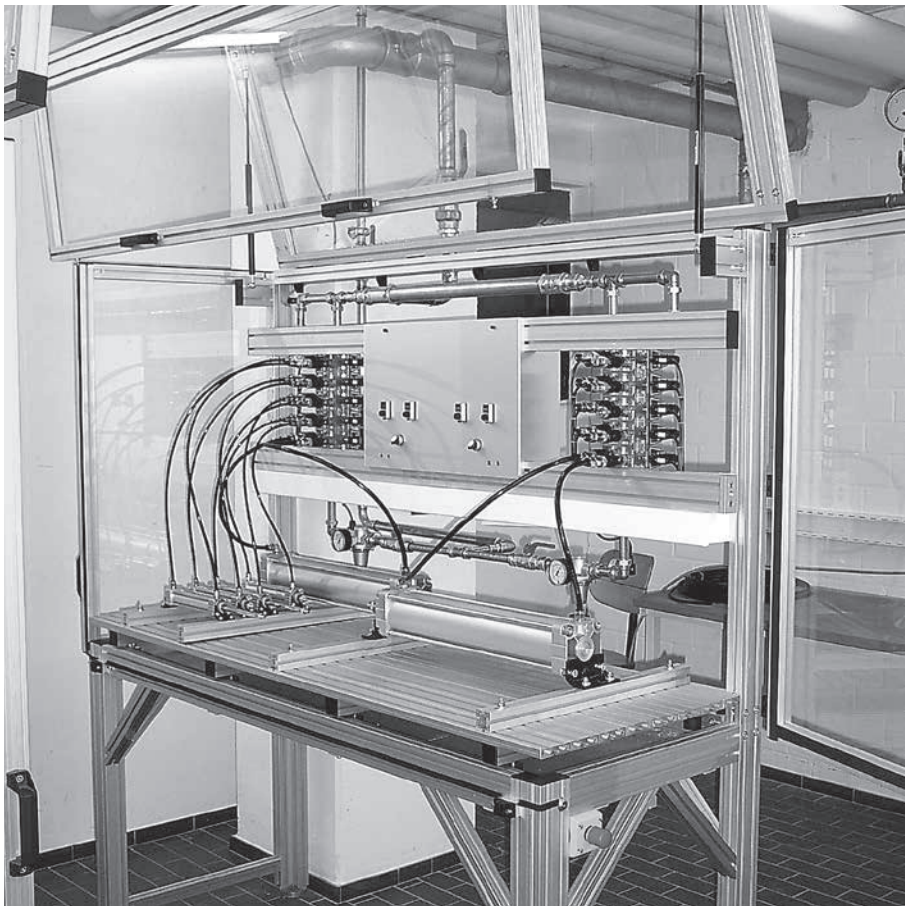

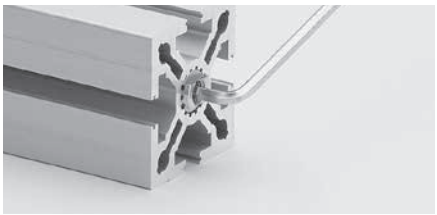

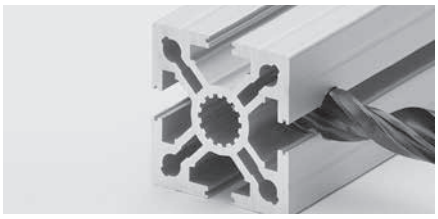

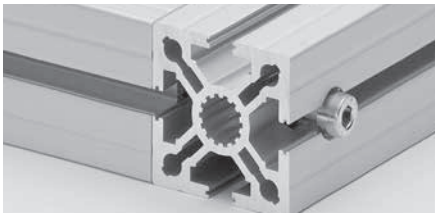

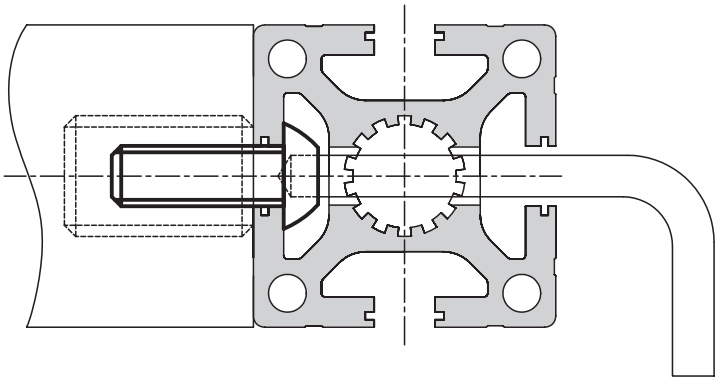

Note:
Instead of a stepped hole, you can also just drill a simple hole for the Allen key and then insert a cheese-head screw into the counter slot.

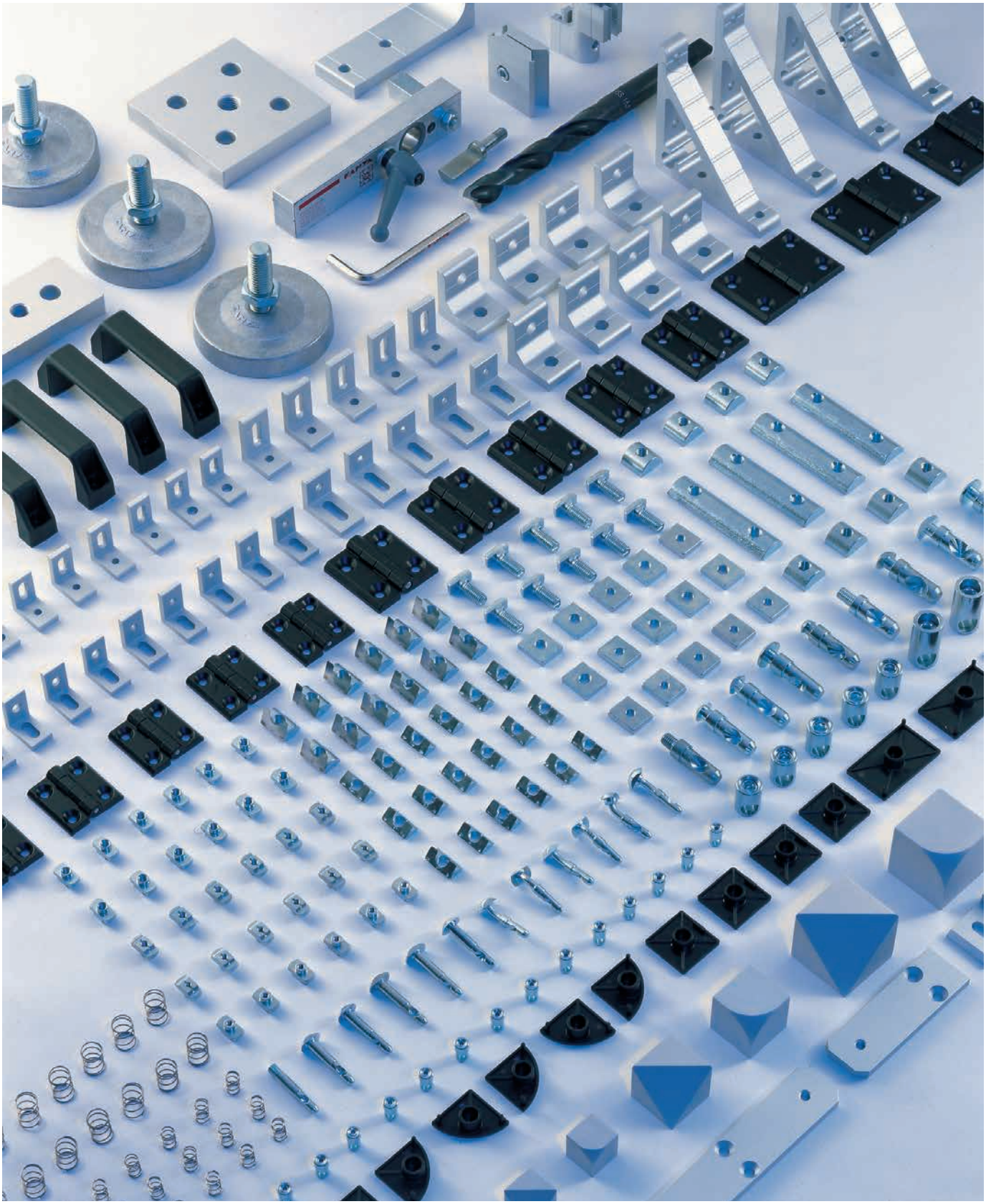

The QUICK way to combine extrusions!

The extensive range of co-ordinated accessories enhances the cost-effectiveness of the KANYA modular extrusion building system. The best use of system extrusions is made when working with all the matching parts. Getting everything from one supplier saves time and a great deal of irritation, not to mention money.
Customer-specific accessories are available or can be specially made to order – yet another advantage of over 25 years experience in system building.

The A–Z of extrusion parts – we have them all!

Mounting brackets

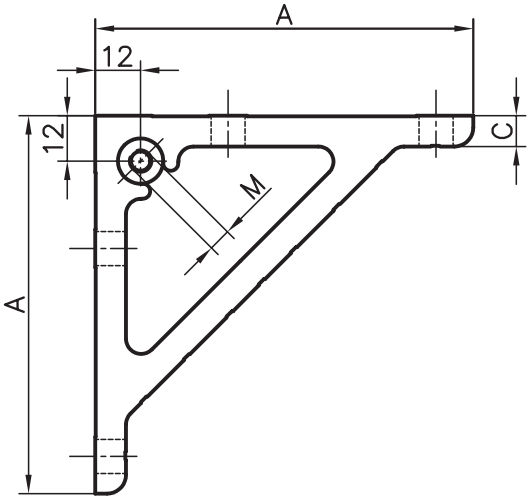

Application
Mounting brackets are simple joining parts which can also be used in combination with PVS. They are used primarily for reinforcement. They can also be used for fixing panels in place thanks to the integral threaded insert.

Specification
Aluminium, matt,
anodised in natural colours

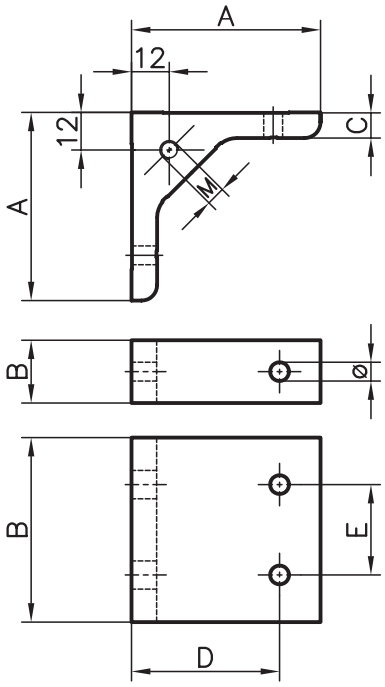

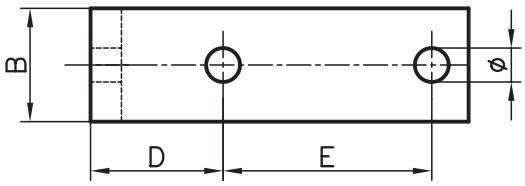

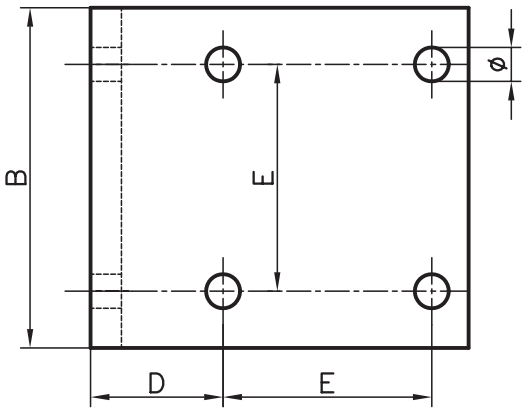

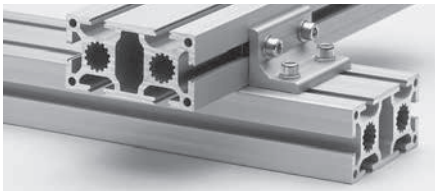

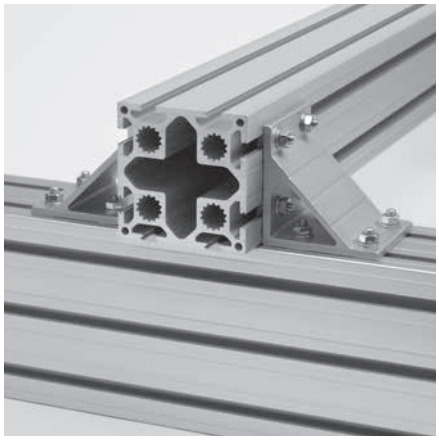

Measurement data							Order number
A	B	C	D	E	Ø	M*	
100	30	8	35	55	9	–	A30–30
100	30	8	25	50	9	–	A30–31
100	75	8	25	50	9	–	A30–32
100	30	8	35	55	9	M6	A30–40
100	20	8	35	55	6.5	–	B30–30
100	20	8	35	55	6.5	M6	B30–40
70	25	5	20	40	6.5	–	C30–30
70	65	5	20	40	6.5	–	C30–32

*insert

Measurement data							Order number
A	B	C	D	E	Ø	M*	
60	20	8	45	–	6.5	–	B30–12
60	20	8	45	–	6.5	M6	B30–22
60	30	8	45	–	9	–	A30–12
60	30	8	45	–	9	M6	A30–22
38	70	8	22.5	45	9	–	E30–02
38	30	8	22.5–25	–	9	–	AE30–00
38	30	8	25	–	9	–	A30–00
38	80	8	25	50	9	–	A30–02
31	20	6	20	–	6.5	–	C30–00
31	60	6	20	40	6.5	–	C30–02

*Thread

Bracket
Typ E30–30

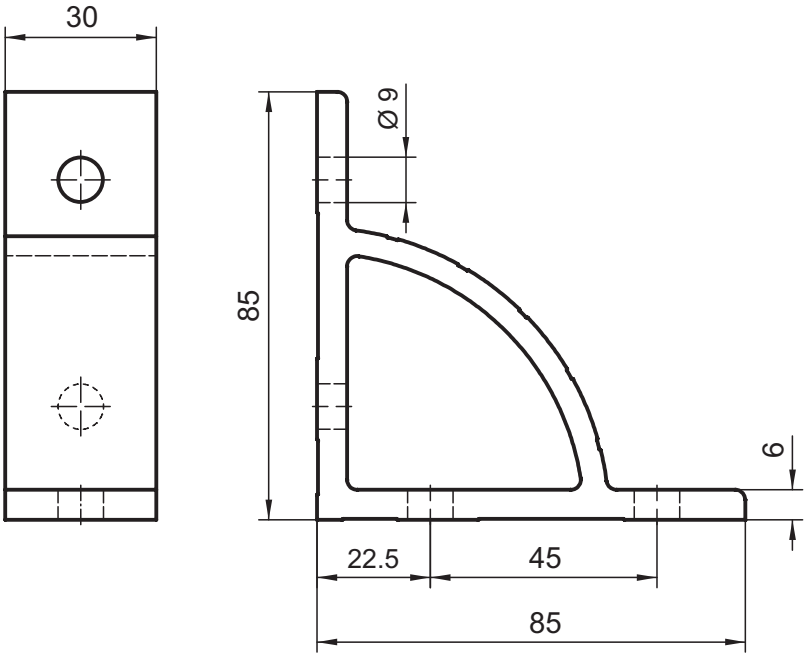

Bracket
Typ E30–32

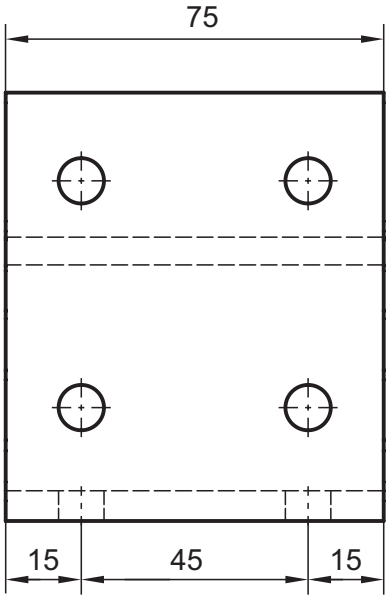

Application
The bracket is aligned in the centre distances for base 45. The elegant support arch permits good access for tightening the bolts.

Specification
Aluminium, matt, anodises in natural colours

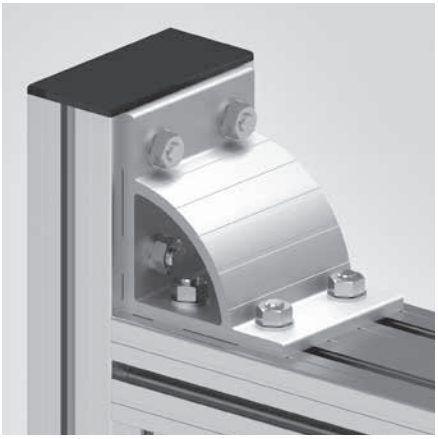

Order data	Order number
Bracket 85x85x30	E30–30

Order data	Order number
Bracket 85x85x75	E30–32

Mounting bracket and dowel

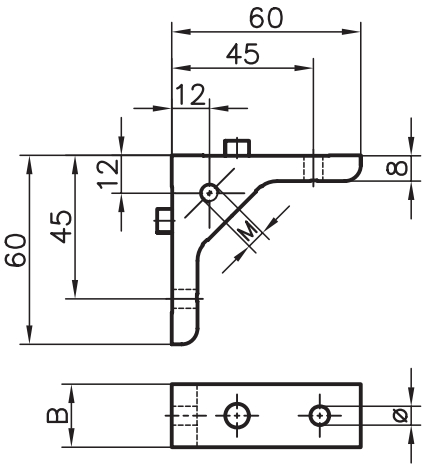

Application
The mounting bracket and dowel are used in any application where the extrusions are subjected to torsion but must not twist. A safe extrusion connection.

Specification
Aluminium, matt,
anodised in natural colours

Measurement data			Order number
B	Ø	M	
30	9	–	A30–13
20	6.5	–	B30–13
30	9	M6	A30–23
20	6.5	M6	B30–23

Clamping block Base 50/40/30

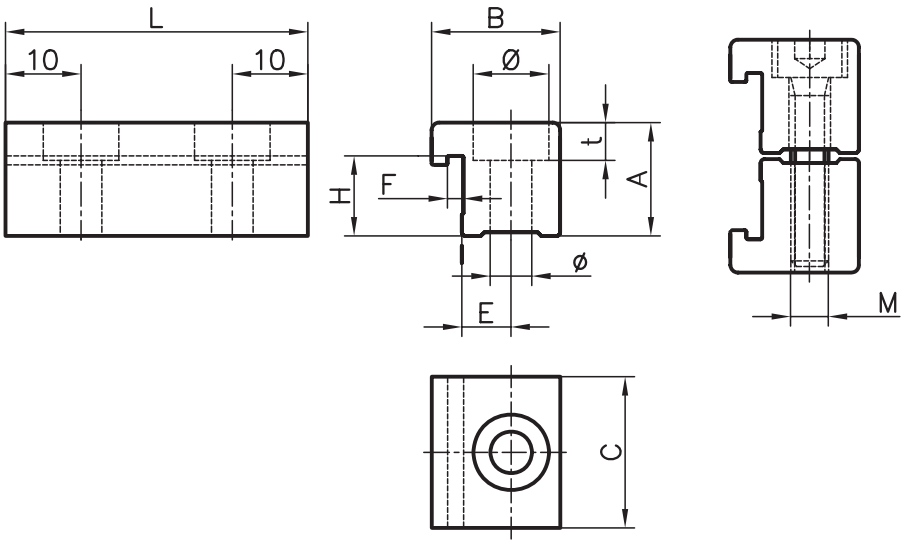

Application
To connect two extrusions of base 30, 40 or 50 in parallel or crossing.
Two blocks are required to create a parallel connection.

Specification
Aluminium anodised
Screw: Zinc-coated steel

Parts supplied
1/2 clamping block(s), screws

Measurement data

	A	B	C	E	F	H	L	Ø	t	ø	
Base 30	15	17	20	6.5	2.1	10.6	50	10	5	5.5	M5
Base 40	22	25	25	10	4	15.6	60	11	6.8	6.6	M6
Base 50	27	25	25	10	4	20.6	70	11	6.8	6.6	M6

Order data	Order number		
Extrusion base	**50**	**40**	**30**
Single clamping blocks			
Cross connection	A34–01	C34–01	B34–01
Parallel connection	A34–11	C34–11	B34–11
Double clamping blocks			
Cross connection	A34–02	C34–02	B34–02
Parallel connection	A34–22	C34–22	B34–22

Uniblock

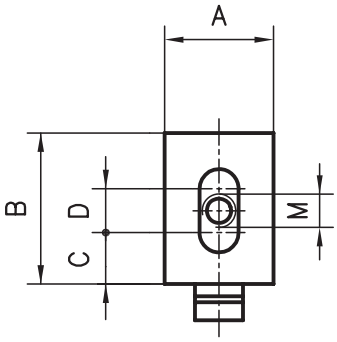

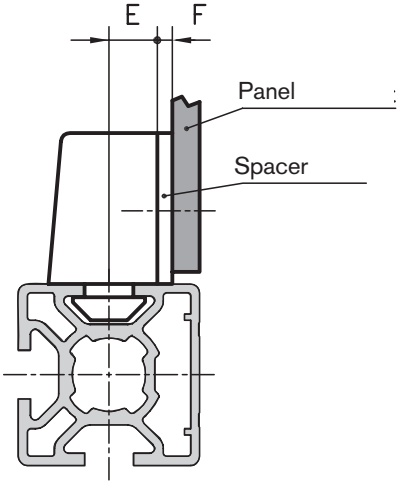

Application
The uniblock is used to secure all sorts of panels in place. The uniblock can be attached to the extrusion without having to use any screws thanks to the attached anchor-head. The panel is then screwed to the uniblock. The captive square nut provides a large tolerance range. Different spacers can be used to give the required gap between the panel and the edge of the extrusion.

Specification
PA-GF, black,
square nut, zinc-coated steel

Clamping block

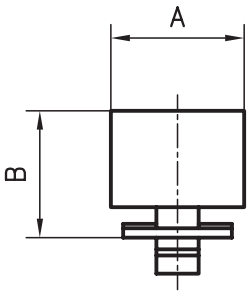

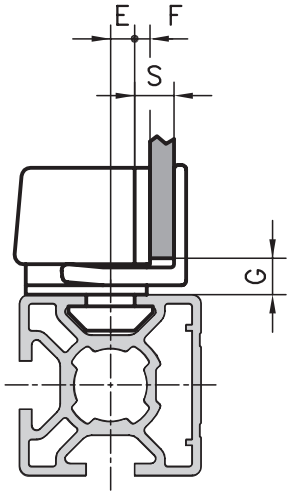

Application
The clamping block can be used to mount panels to extrusions without any additional fixings. The panel is clamped in the block by means of a toothed slide, simply and without having to use a tool. Spacers can also be used in the clamping block to give the required gap between the panel and the edge of the extrusion.

Specification
PA-GF, black

Order data						Order number
A	B	C	D	E	M	
Uniblock extrusion base 50 / 45						
19	25	7.5	9.5	16	M4	A30–94
					M5	A30–95
					M6	A30–96
Uniblock extrusion base 45 / 50						
19	25	7.5	9.5	11	M4	C30–94
					M5	C30–95
					M6	C30–96
Uniblock extrusion base 30						
19	25	11	4.5	6	M4	B30–94
					M5	B30–95
					M6	B30–96
Uniblock extrusion base 20						
12	16	5.5	4.5	5	M4	D30–94

Order data		Order number
Spacers for extrusion base 50 / 45 / 40 / 30		
F =	2 mm (without holes)	A302–97
	3 mm	A303–97
	5 mm	A305–97
Spacers for extrusion base 20		
F =	1 mm (without holes)	D301–97
	2 mm	D302–97
	3 mm	D303–97
	4 mm	D304–97

Order data					Order number
A	B	E	G	Smax.	
Clamping block extrusion base 50 / 45					
22	21	13.5	5	10 mm	A30–90
Clamping block extrusion base 45 / 40					
22	21	8.5	5	10 mm	C30–90
Clamping block extrusion base 30					
16	15.5	10	5	8 mm	B30–90

Spacers for extrusion base 50 / 45 / 40 / 30		
F =	2 mm	A302–98
	3 mm	A303–98
	5 mm	A305–98

Rapid connection blocks

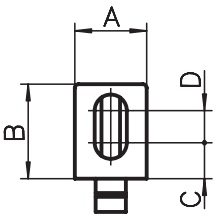

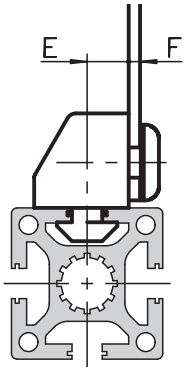

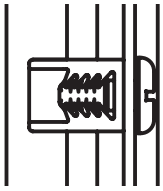

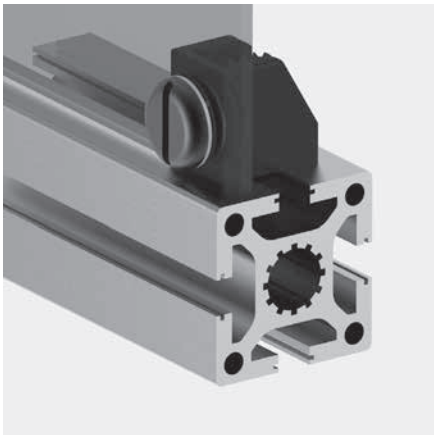

Specification
PA-GF, black
Fastening pin, PA-GF
Wave washer, POM

Application
The rapid connection block is used to secure all sorts of panels in place up to 5mm in thickness. The rapid block can be attached to all 50/45/40/30 base extrusions without having to use any screws thanks to the corresponding base. The panel is then attached using only a plunger pin. It can be easily unscrewed by simply turning it a quarter turn.

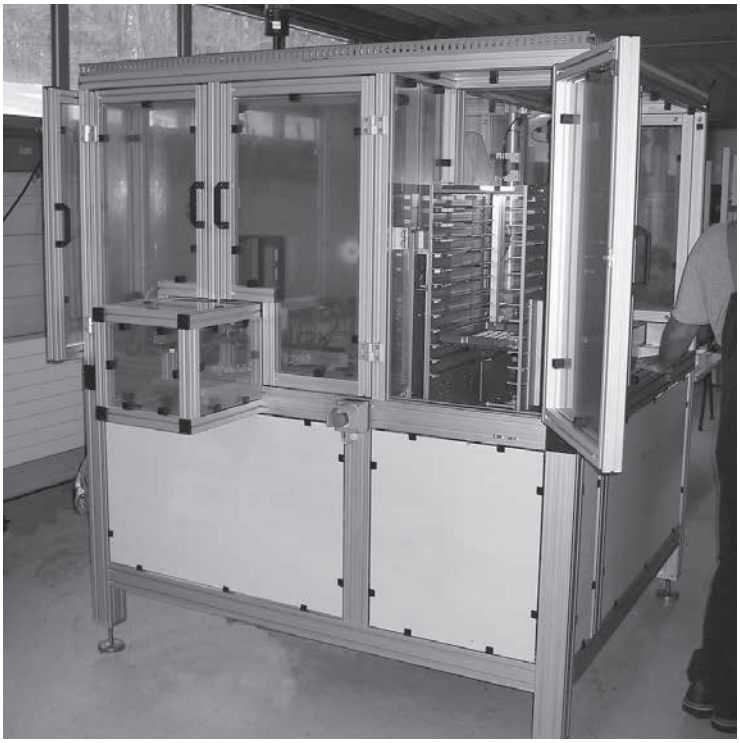

Measurement data						Order number
A	B	C	D	E	F	
Base 50 / 45						
19	25	9.5	8.5	16	to 5	A30–80
Base 45 / 40						
19	25	9.5	8.5	11	to 5	C30–80
Base 30						
19	25	6.5	7	5	to 6	B30–80

Attachment bracket

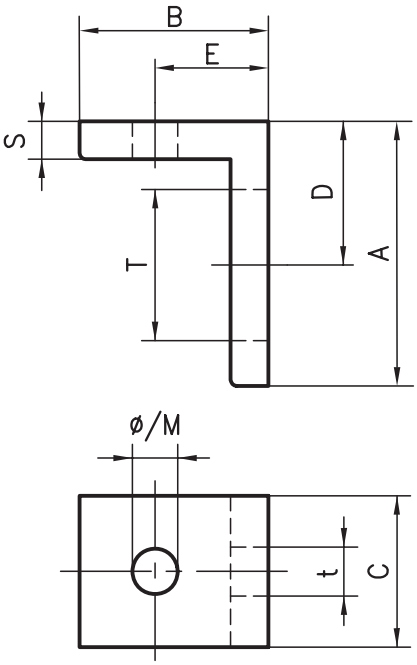

Application
The fixing angle is used to mount additional equipment, panelling, work tops, valves, electrical switchgear, etc.
The advantage of these is that they are slotted on one side, allowing fine adjustment.

Specification
Aluminium, matt,
anodised in natural colours

Order data									Order number	
A	B	C	D	E	S	Txt	Ø	Thread	Through-hole Ø	Thread M
45	45	20	25	25	5	20x6.5	6.2	M6	A30–76	A30–86
35	25	20	19	15	5	20x6.5	4.2	M4	A30–54	A30–64
35	25	20	19	15	5	20x6.5	5.2	M5	A30–55	A30–65
35	25	20	19	15	5	20x6.5	6.2	M6	A30–56	A30–66
25	25	15	14	15	4	13.5x6	3.2	M3	B30–53	B30–63
25	25	15	14	15	4	13.5x6	4.2	M4	B30–54	B30–64
25	25	15	14	15	4	13.5x6	5.2	M5	B30–55	B30–65
25	25	15	14	15	4	13.5x6	6.2	M6	B30–56	B30–66

Further dimensions on request

T-bolts

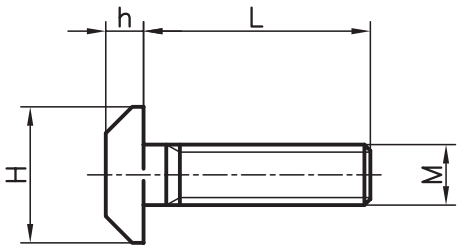

Application
T-bolts are used to fasten all types of components and are simple to insert, even after assembly. The anti-twist shape is a help during assembly.

Specification
8.8 steel, zinc-coated

Scope of delivery
Screw, hexagonal nut, washer

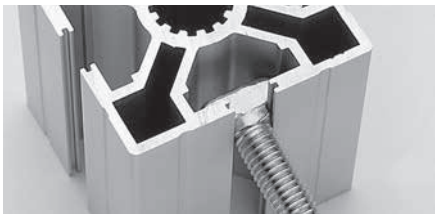

Order data			Order number
MxL	**H**	**h**	
Extrusion base 50 / 45			
M8x20	18	5	A35–20
M8x25	18	5	A35–25
M8x30	18	5	A35–30
M8x40	18	5	A35–40
M8x60	18	5	A35–60
Extrusion base 50 / 45 / 40			
M6x18	18	5	C35–18
M6x25	18	5	C35–25
M6x30	18	5	C35–30
Extrusion base 30			
M6x15	13	4	B35–15
M6x20	13	4	B35–20
M6x30	13	4	B35–30
M6x40	13	4	B35–40

Threaded plates

Extrusion base of 50 / 45 / 40

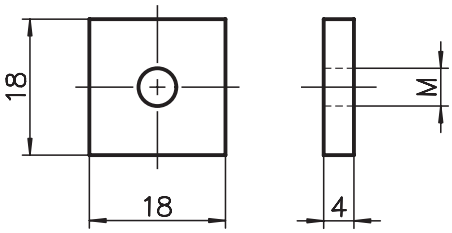

Extrusions base of 30 and 20

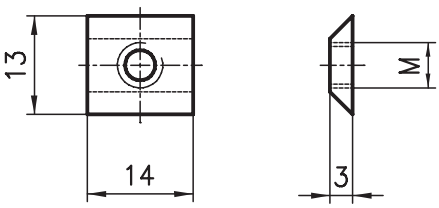

Application

For attaching components which are anything up to medium weight. Threaded plates must be inserted into the front-end of the extrusion slots.

Specification

Threaded plates: Zinc-coated / stainless steel
Base 50 / 45 / 40 supporting cage: PP
Base 30 spring steel retaining spring

Double threaded plates

Extrusions base of 50 / 45 / 40

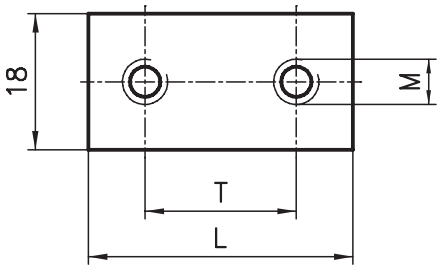

Measurement data

Extrusion base	L	T	M
50 / 45 / 40	45	30	M6
	30	18	M5

Application

The M6 double extrusion nuts are used for attaching hinges (page 195), M5 is used for arrester plate (page 204).

Halfround threaded plates Base 50

Extrusions base of 50

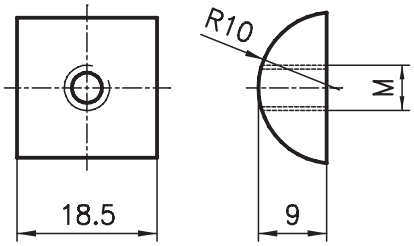

Application

Halfround threaded plates can only be used with 50 mm base extrusions. These plates are only available threaded M10.

Specification

zinc-coated steel

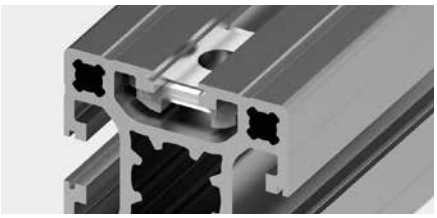

Order data	Order number	
Thread M	Extrusions base 50 / 45 / 40	30 / 20
M3	–	B32–30
M4	AC32–40 (–I)	B32–40
M5	AC32–50 (–I)	B32–50
M6	AC32–60 (–I)	B32–60
M8	AC32–80 (–I)	–

(–I=stainless steel)

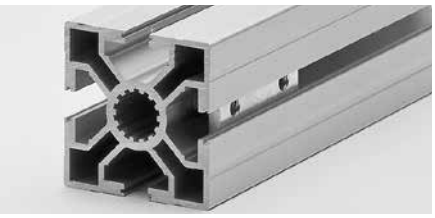

Order data	Order number
Double extrusion nuts Thread M	Extrusions base 50 / 45 / 40
M5	A32–58
M6	A32–68

Order data	Order number
Halfround threaded plates Thread M	Extrusions base 50
M6	A32–61
M8	A32–81
M10	A32–91

Extrusion nuts Clamping nuts

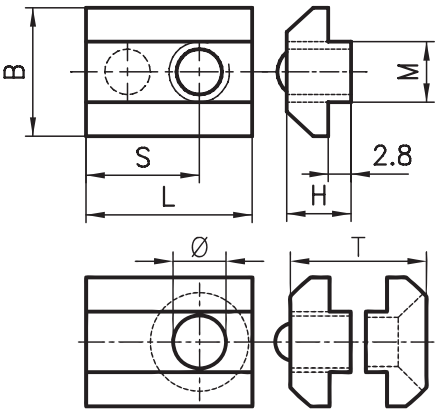

Measurement data

Extrusion base	B	H	L	S	T	Ø
50	18	12.2	25	15	–	–
40	17	8	22	15	–	–
50/50	18	12.2	25	15	23	6.5
50/40	18	12.2	25	15	23	6.5
40/40	17	8	25	15	19	6.5

Application

The extrusion nut is recommended for securing heavy components with high tightening torques. Threaded plates and extrusion nuts are inserted before assembly into the end of the extrusion slots.

Specification

zinc-coated steel

Order data — **Order number**

Extrusion nuts	Extrusion base	
Thread M	**50**	**40**
M6	A32–63	C32–63
M8	A32–83	C32–83
M10	–	C32–93

Clamping nuts	50/50	50/40	40/40
M6	A32–69	A32–69	C32–69

Light extrusion nuts

Extrusion base 50/45/30

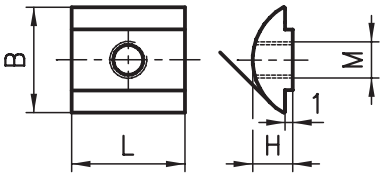

Extrusion base 40

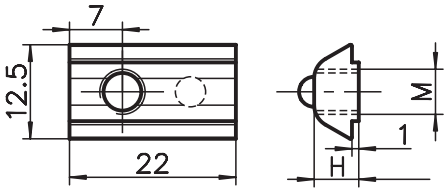

Measurement data

Extrusion base	B	H	L
50	14	7.8	20
40	12.5	5.9	22
30	11	4.1	20

The advantage of the light extrusion nuts is that they can also be inserted diagonally into the extrusion slots. The disadvantage is that the tightening torques >12 Nm may result in dents in the aluminium extrusion. Raw steel bars are available if you wish to machine special nuts.

Order data — **Order number**

Light extrusion nuts	Extrusion base		
Thread M	**50/45**	**40**	**30**
M4	A32–45	C32–45	B32–45 (–I)
M5	A32–55 (–I)	C32–55 (–I)	B32–55 (–I)
M6	A32–65 (–I)	C32–65 (–I)	B32–65 (–I)
M8	A32–85 (–I)	C32–85 (–I)	B32–85* (–I)
Extrusion (raw)			
1.5 m	A32–52	C32–52	B32–52
	A32–12	C32–12	

* no full torque possible (I=Inox)

Double extrusion nuts

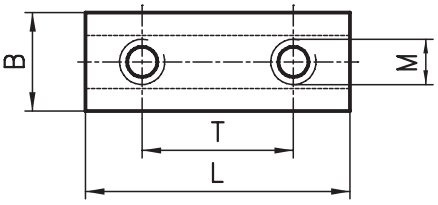

Measurement data

Double extrusion nuts

Extrusion base	B	H	L	T	M
50 (ball)	18	12.2	80	50	M8
40 (ball)	17	8	60	40	M8

Light double extrusion nuts

Extrusion base	B	H	L	T	M
50/45	14	7.8	40	30	M6
40 (ball)	13.6	5.9	40	30	M6
30	11	4.1	40	30	M6
30	11	4.1	30	18	M4

Application

Double extrusion nuts should be used with PVS threaded connectors where extremely high strength joints are required. Light double extrusion nuts are used for the assembly of hinges (page 195) and quick-release fasteners (page 204).

Order data — **Order number**

Double extrusion nuts	Extrusion base		
Thread M	**50**	**40**	**30**
M8	A32–84	C32–84	–
Light double extrusion nuts			
M6	A32–67*	C32–67	B32–67
M4	–	–	B32–47

* for base 50+45

Hammer nuts

Base 50/45/40

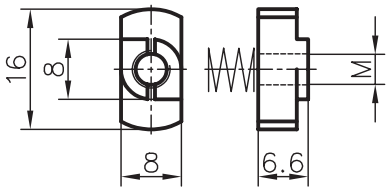

Base 30/20

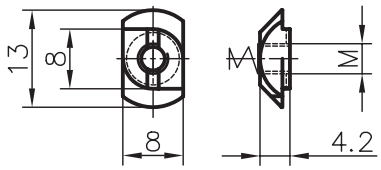

Application
The spring and rhomboid nuts can be used for the same purpose as the threaded plates and the extrusion nuts. They can be inserted into the extrusion slot after assembly. The nuts can be spaced close together because they are only 8 mm wide. However, their load-bearing capability is clearly lower than those of threaded plates and extrusion nuts.

Specification
Zinc-coated steel; retaining springs: spring steel

Order data	Order number	
	Extrusion base	
Thread M	50/45/40	30/20
M3	AC31–35	BD31–35
M4	AC31–45	BD31–45
M5	AC31–55	BD31–55
M6	AC31–65	BD31–65

Rhomboid nuts

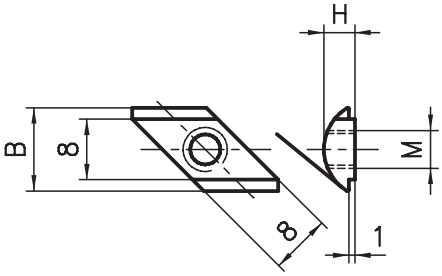

Measurement data		
Extrusion base	B	H
50/45/40	13.6	5.9
30/20	11	4.1

Application
Zinc-coated steel

Order data	Order number	
	Extrusion base	
Thread M	50/45/40	30/20
M3	–	BD31–30
M4	AC31–40	BD31–40
M5	AC31–50	BD31–50
M6	AC31–60	BD31–60

Anti-twist spigots

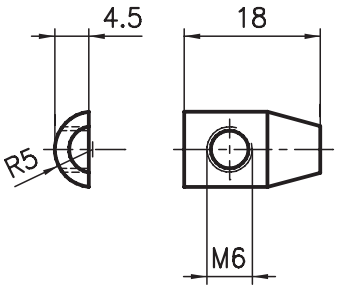

Application
For all extrusions which are assembled with a PVS connector and which must not twist. The spigot can also be fitted to existing extrusions (does not apply to 20x20 extrusions).

Specification
Zinc-coated steel

Parts supplied
Spigot, adjusting screw

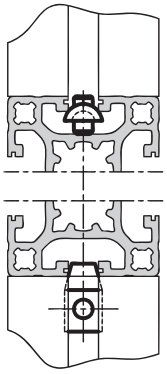

Order data	Order number	
	50/45/40	30/20
Spigot	AC29–00	BD29–00

Threaded inserts

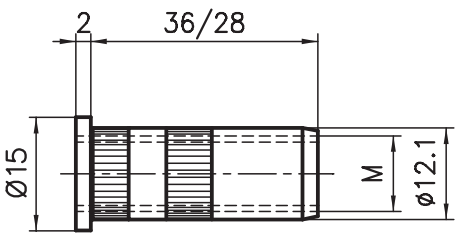

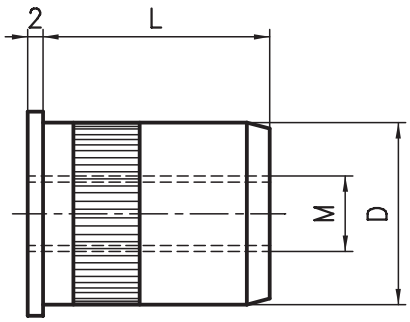

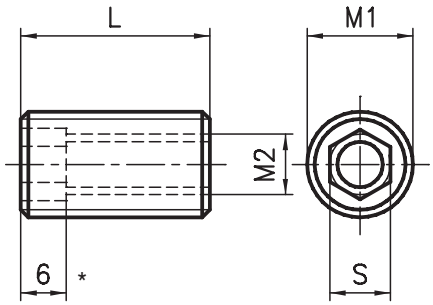

Application
The threaded insert, which is manufactured with an external knurl, is inserted into a 12 mm hole across the line of the extrusion, enabling levelling feet and casters to be fixed to horizontal extrusions.

Specification
Zinc-coated steel

Application
Once the threaded insert has been pressed into the front side of extrusions B02–6/C03–4/, levelling feet or casters can be attached.

Specification
Raw aluminium

Application
The screw-in threaded insert is primarily used to take levelling feet and casters or to fix end panels or base plates in place.

Note that there is no thread around * the hexagon socket.

Specification
Zinc-coated steel

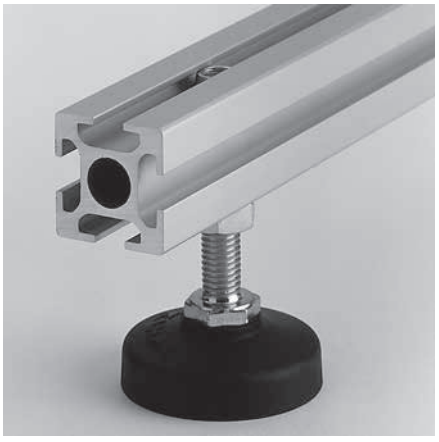

Order data	Order number	
	Extrusion base	
Thread M	50/45/40 (L=36)	30 (L=28)
M10	C33–20	B33–20
M8	C33–22	B33–22

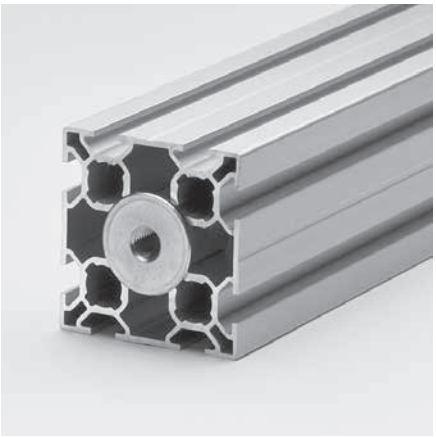

Measurement data			Order number	
Thread			Extrusion type	
M	D	L	B02–6	C03–4
M10	ø 24.6	30	B33–60	–
M14	ø 24.6	30	B33–64	–
M16	ø 30	30	–	C33–16
M10	ø 30.5	18	–	–

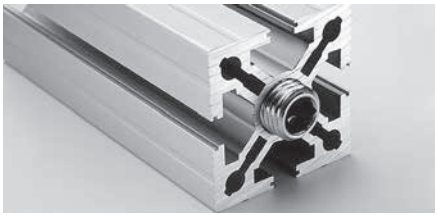

Measurement data				Order number	
Thread				Extrusion base	
M1	M2	S	L	50/45/40	30
M16	M12	12	25	A33–12	
M16	M10	10	25	A33–20 (–I)	
M16	M8	8	25	A33–28 (–I)	
M16	M6	6	25	A33–26	
M14	M10	10	25		B33–21 (–I)
M14	M8	8	25		B33–28
M14	M6	6	25		B33–26

(–I=stainless steel)

Self-cutting threaded insert

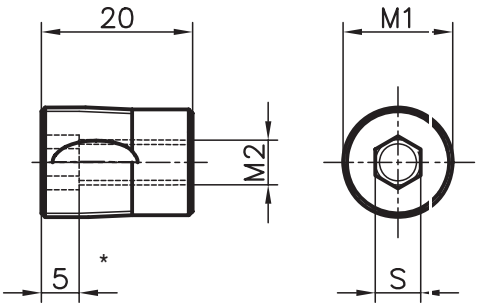

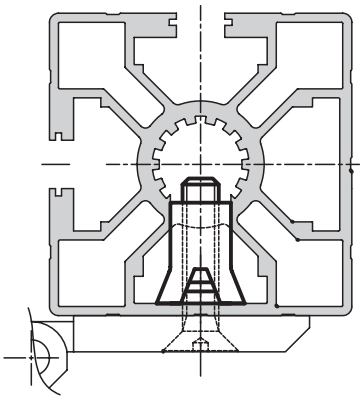

Attachment to extrusion

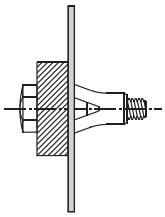

Attachment to sheets

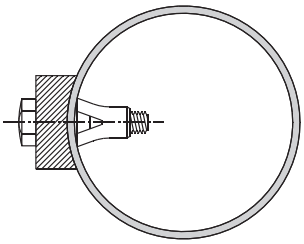

Attachment to tubes

Application

The self-cutting threaded insert has the advantage that no machining is required in order to attach elements on the face. Connections subject to tensile stress are primarily only ideal. This means that attaching levelling feet or casters is not recommended.

Note that there is no thread around * the hexagon socket.

Specification

Zinc-coated steel

Order data			Order number	
Self-cutting *				
Thread			**Extrusion base**	
M1	**M2**	**S**	**50/45/40**	**30**
M14.5	M6	6	A33–06	
M14.5	M8	8	A33–08	
M13	M5	6		B33–05
M13	M6	6		B33–06
M13	M8	8		B33–08

* Not suitable for casters/levelling feet

Threaded dowel

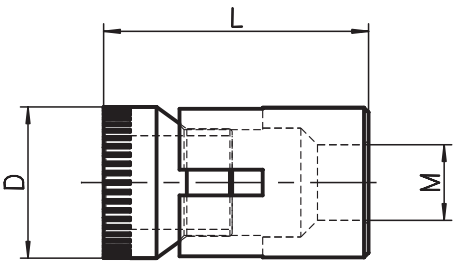

Application

The patented two-part dowel is securely anchored in the component during assembly by spreading apart whilst being flush with the surface.

The dowel is placed directly into the hole with the object. The circumferential knurling keeps the expanding cone in the hole flush with the surface, the sleeve expands as it is tightened (commercially available screw) against rotation to the rear of the extrusion.

Specification

Zinc-coated steel

Order data		Order number	
Thread		**Base**	**Hole ø**
M	**D x L**	**50**	
M5	8 x 15	A33–85	Ø8 x 21.5
M6	10 x 18	A33–86	Ø10 x 27
		50/40	
M8	13 x 25	A33–88	Ø13 x 28.5
		40/30	
M5	8 x 15	B33–85	Ø8 x 15
M6	10 x 18	B33–86	Ø10 x 18

Order data	Order number
Clamping tool for M8	E96–8

Levelling feet

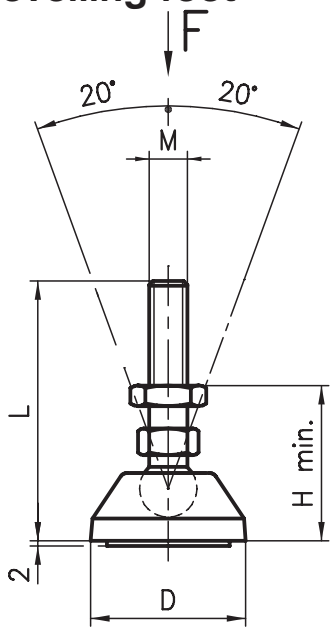

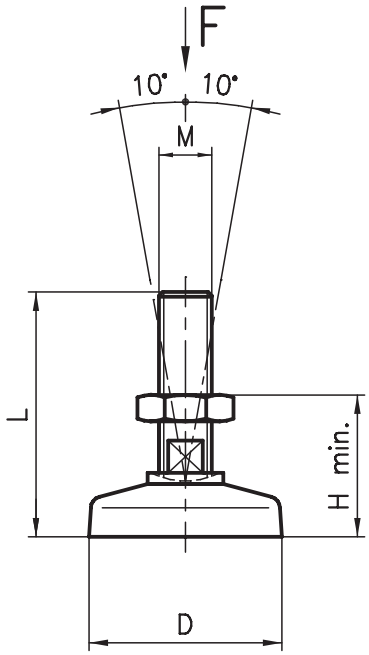

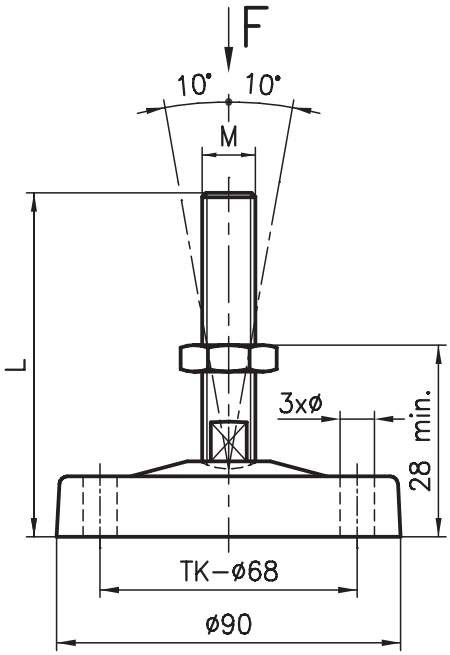

Application
Cup: glass-filled Polyamide (PA-GF) black
Bolt/locknut: 8.8 steel, zinc-coated
Anti-slide pad: NBR rubber

Order data				Order number
MxL	**D**	**H**	**F**	
M6x57	19	25	500 N	B43–02
M10x75	29	30	2000 N	B43–10
M10x75	39	30	3000 N	B43–11
M10x75	49	30	3000 N	B43–12
M16x155	39	40	8000 N	B43–16

Other dimensions or special feet are available on demand.

Application
These continuously variable levelling feet are used for many different applications. The cup is attached in such a way as to compensate for uneven floors.

Specification
Cup: PA-GF black
Bolt/locknut: 8.8 steel, zinc-coated

Order data				Order number
MxL	**D**	**H**	**F**	
M10x70	50	30	2500 N	B42–50
M10x122	50	30	2500 N	B42–00
M14x65	50	25	3000 N	B42–54
M14x115	50	25	3000 N	B42–14
M16x65	50	25	3500 N	B44–50
M16x115	50	25	3500 N	B44–00

Specification
Cup: PA-GF black or aluminium
bolt : 8.8 steel, zinc-coated

Order data			Order number
MxL	**Ø**	**F**	**PA-GF**
M14x70	9	4000 N	B45–54
M14x120	9	4000 N	B45–14
M16x70	9	5000 N	B45–50
M16x120	9	5000 N	B45–00
			Aluminium
M14x70	9	8000 N	B45–55
M14x70	–	8000 N	B45–56
M14x120	9	8000 N	B45–03
M14x120	–	8000 N	B45–04
M16x70	9	10’000 N	B45–51
M16x70	–	10’000 N	B45–52
M16x120	9	10’000 N	B45–01
M16x120	–	10’000 N	B45–02

Levelling feet with shock absorbers

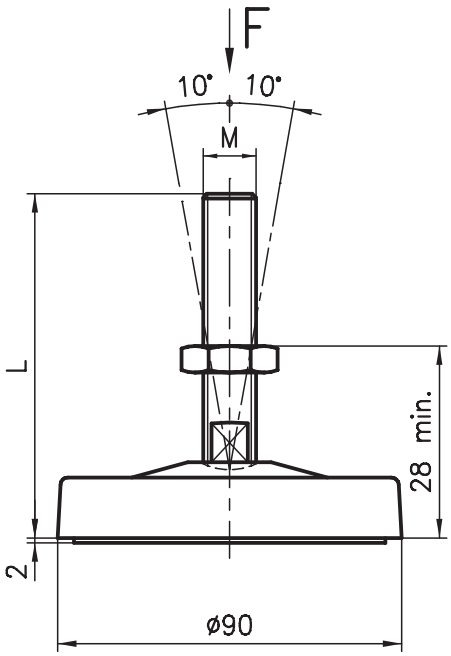

Application
The aluminium levelling foot is available with a special shock absorber insert. This ensures that vibrating structures sit securely on the floor.

Specification
Cup: aluminium
Roundel: ø 80x18
Multi-layer, non-slip, vibration-absorbent, composite structure.
Bolt: 8.8 steel, zinc-coated

Order data		Order number
MxL	**F**	
M14x70	5000 N	B45–56–D
M14x120	5000 N	B45–04–D
M16x70	5000 N	B45–52–D
M16x120	5000 N	B45–02–D

Electrically conductive levelling feet

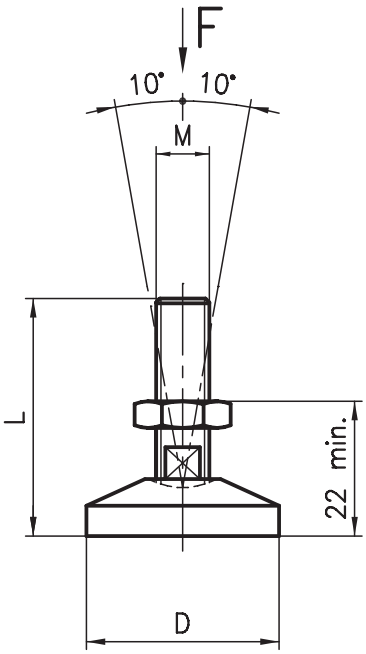

Application
It is essential to use these levelling feet in applications where electrostatic charges must be earthed. (See also PVS connectors with electrical bonding)

Specification
Cup: aluminium raw
Bolt: aluminium raw

Order data			Order number
MxL	**D**	**F**	
M14x65	30	3000 N	B42–54–P
M16x115	50	3500 N	B44–00–P
M16x115	30	3500 N	B44–54–P

Base plates

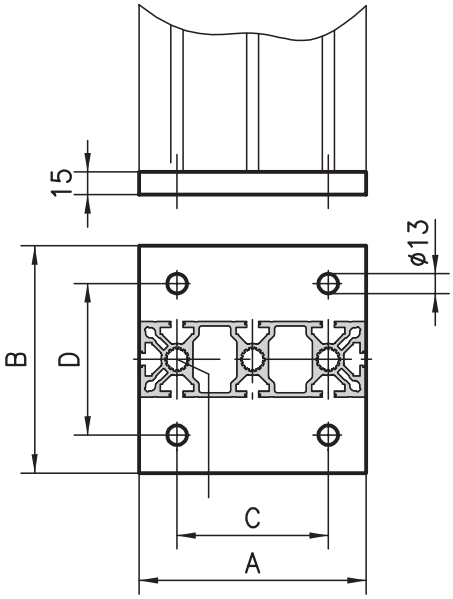

Application
When structures are subjected to heavy loads, structural stability is extremely important. The solid steel base plate meets this requirement in every respect, guaranteeing a high level of safety.

Specification
Steel, gunmetal finish

Fixing kit*
Bolt(s) M16x30

Order data					Order number
Extrusion	**A**	**B**	**C**	**D**	
50x50	150	50	120	–	A47–50*
50x150	150	150	100	100	A47–70*
100x100	200	100	150	70	A47–80*
40x40	120	40	90	–	C47–40*
80x80	150	80	120	50	C47–80*

* Fixing kit: add –S to the order number
Example:: A47–50–S

Foot plates

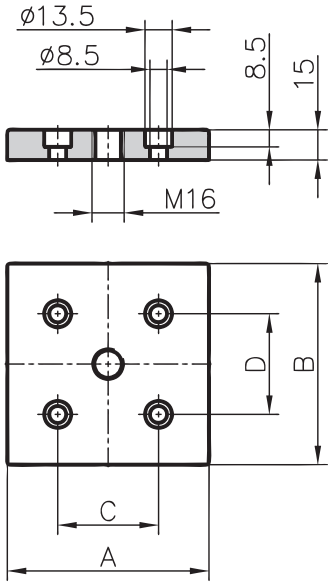

Application
For use with extrusions without a central core hole when fixing levelling feet and casters.

Specification
Aluminium, anodised in natural colours

Fixing kit*
Screws and threaded inserts

Order data					Order number
Extrusion	**A**	**B**	**C**	**D**	
100x00	100	100	50	50	A80–20*
90x90	90	90	45	45	E80–20*
80x80	80	80	40	40	C80–20*
45x90	45	90	–	45	E80–24*
40x80	40	80	–	40	C80–24*

* Fixing kit: add –S to the order number
Example: A80–20–S

Floor bolting bracket

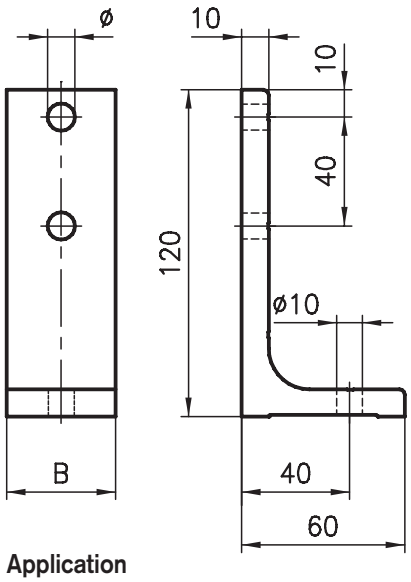

Application
A floor bolting bracket is used when a system has been aligned and has to be bolted to the floor. It is very easy to use because its height can be adjusted in the extrusion slot and the bracket can be easily secured to the floor using anchor bolts.

Specification
Aluminium, anodised in natural colours

Fixing kit*
2 screws, 2 threaded plates, 2 washers

Order data			Order number
Extrusion base	**B**	**ø**	
50/45/40	40	8.5	A47–00*
30	30	6.5	B47–00*

* Fixing kit: add –S to the order number
Example: A47–00–S

Double bolting bracket

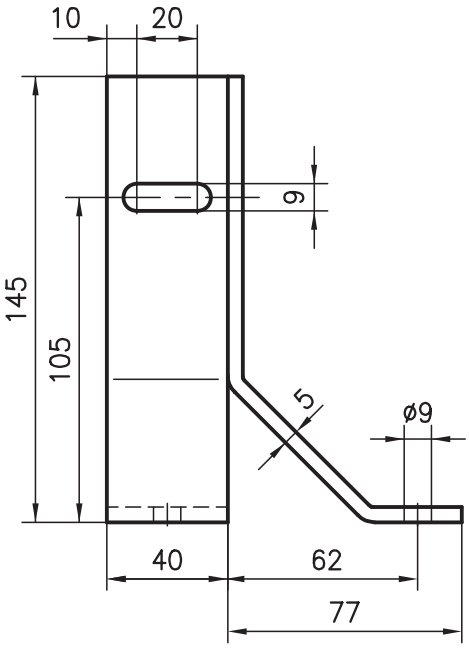

Application
An advance on the normal floor bolting bracket, with the added advantage that it can be used together with large levelling feet (Ø 90). The double bolting bracket also secures the supporting extrusions in two directions.

Specification
Steel, powder-coated in black

Order data	Order number
Double bolting bracket	A47–20(–S)*

Single bolting bracket

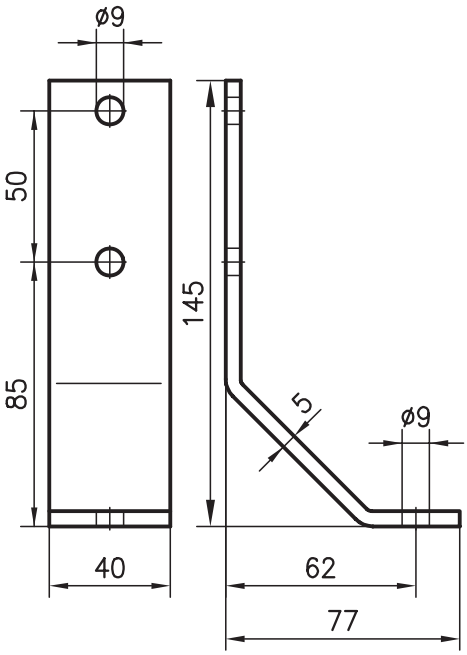

Application
For easy fixing to the floor. As with the double bolting bracket, this single bolting bracket can be combined with a levelling foot.

Specification
Steel, powder-coated in black

Fixing kit*
2 screws
2 (3) threaded plates
2 washers

*Fixing kit: add –S to the order number

Order data	Order number
Single bolting bracket	A47–21(–S)*

Single bolting bracket reinforced

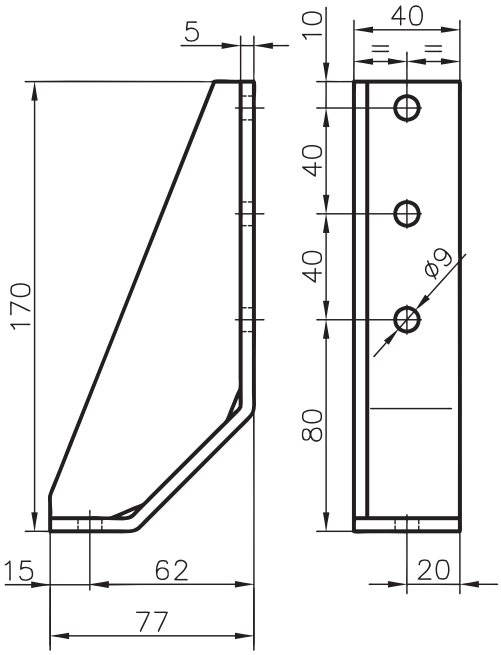

Application
Same as the aluminium floor bolting bracket with the added advantage that it can be used together with large levelling feet Ø 90.

Specification
Steel, powder-coated in black

Order data	Order number
Single bolting bracket	A47–22(–S)*

Leg bolt-down socket

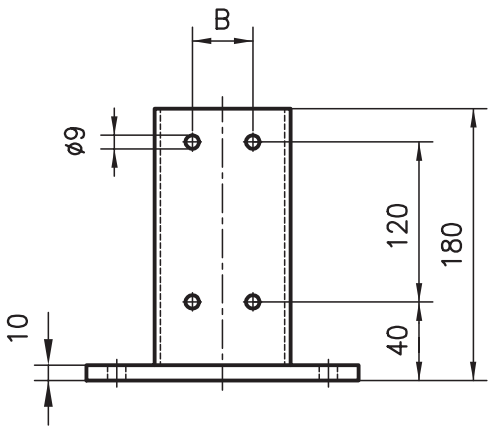

Application
The bolt-down socket is used in applications where the legs have to be very firmly secured to the ground. The extrusion can be adjusted easily within the guide socket and can be secured in place using the fixing kit included. The bolt-down socket should be chosen, from the three available, to suit the space available.

Specification
Steel, powder-coated in black

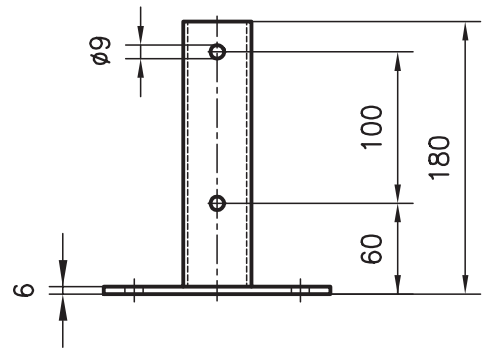

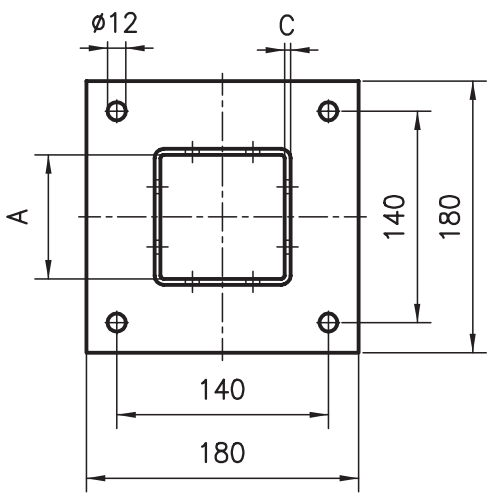

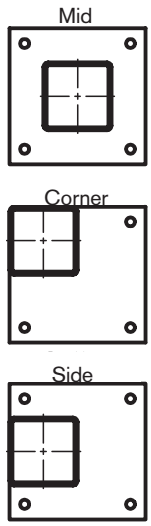

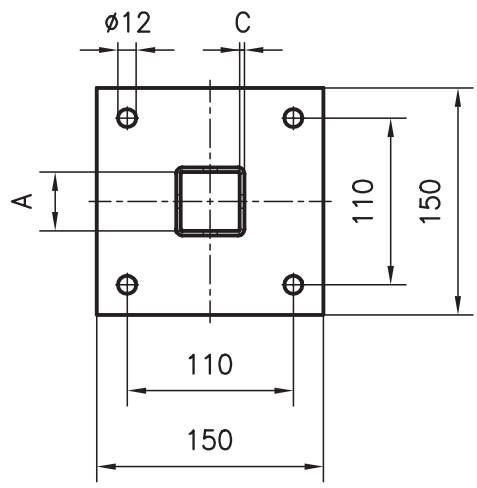

Fixing kit*
(applies to all types)
8 cylinder screws, 8 threaded plates
8 washers

Fixing kit*
(applies to all types)
4 cylinder screws, 4 threaded plates,
4 washers

Order data	A	B	C	Type	Order number
Extrusion 80x80	82	40	4	Middle	C47–36
				Corner	C47–37
				Side	C47–38
*Fixing kit					C47–36–S
Extrusion 90x90	92	45	4	Middle	E47–36
*Fixing kit					E47–36–S

Order data	A	B	C	Type	Order number
Extrusion 40x40	41	–	2	Middle	C47–32
				Corner	C47–33
				Side	C47–34
*Fixing kit					C47–32–S
Extrusion 50x50	52	–	4	Middle	A47–32
				Corner	A47–33
				Side	A47–34
*Fixing kit					A47–32–S

Castors

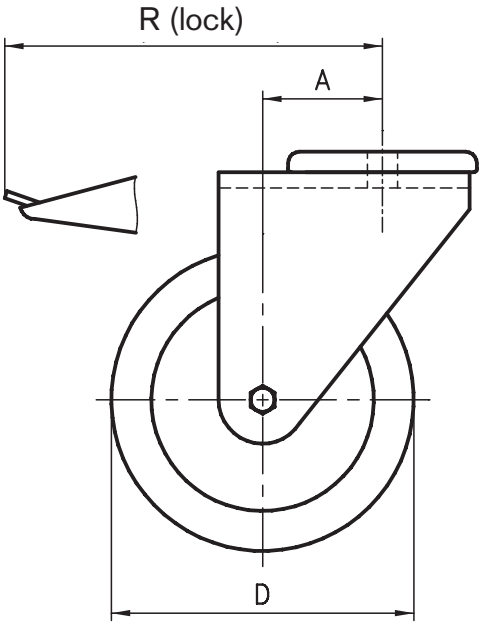

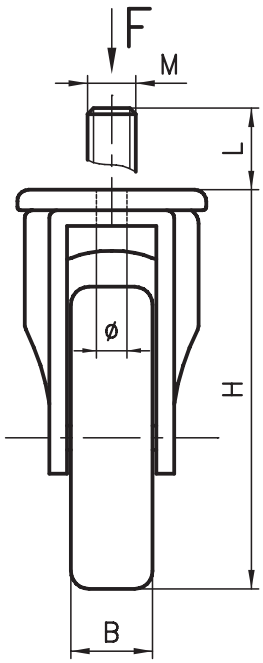

Non-swivel castors

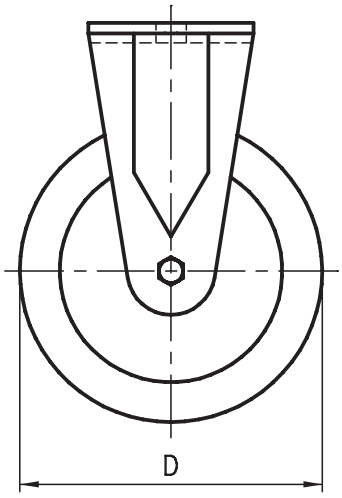

Application

Can be used in any application where mobility is required. There are four diameters of wheels available (with or without locks) depending on the load capacity required. Swivel and non-swivel castors have the same load capacity. (F)
The castors can be simply attached to the extrusions either with an M10 bolt or by means of an M16 / 14x25 threaded stud.
range of application -17° to +60°C

Specification

Fork : Zinc-coated steel, Ball bearing
Wheel: Rubber tyre 87° Shore, Ball bearing
with «fender» made of POM light gray

Order data								Order number	
	D	B	H	A	R	Ø / MxL	F	no lock	with lock
Castor	50	18	69	24	72	Ø 10.3	400 N	B48–50	B49–50
Castor	50	18	69	24	72	M14x25	400 N	B48–54	B49–54
Castor	75	25	100	24	85	Ø 10.3	700 N	B48–75	B49–75
Castor	75	25	100	24	85	M14x25	700 N	B48–74	B49–74
Castor	100	32	135	44	118	Ø 10.3	800 N	B48–100	B49–100
Castor	100	32	135	44	118	M16x25	800 N	A48–100	A49–100
Castor	100	37	124	36	118	Ø 10.3	1200 N	B48–101	B49–101
Castor	100	37	124	36	118	M16x25	1200 N	A48–101*	A49–101*
Castor	125	32	160	40	118	Ø 10.3	1000 N	B48–125	B49–125
Castor	125	32	160	40	118	M16x25	1000 N	A48–125	A49–125

For load of >800N we recommend castors with PO-wheels. * PO wheels

Castors with PO-Wheels and other sizes, heavy duty and anti-static castors are available on request.

Order data					Order number
	D	B	H	Ø / MxL	
Non-swivel castors	75	22	97	Ø 10.3	B48–77
Non-swivel castors	75	22	97	M14x25	B48–78
Non-swivel castors	100	25	132	Ø 10.3	B48–107
Non-swivel castors	100	25	132	M16x25	A48–108
Non-swivel castors	125	32	158	Ø 10.3	B48–127
Non-swivel castors	125	32	158	M16x25	A48–128

Casters with backplate

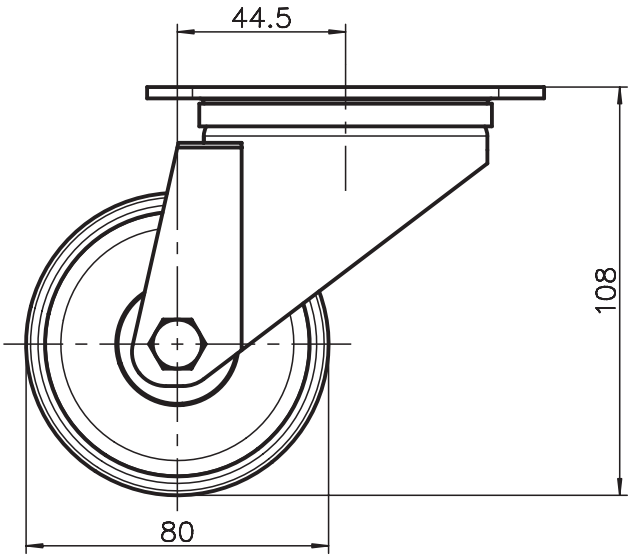

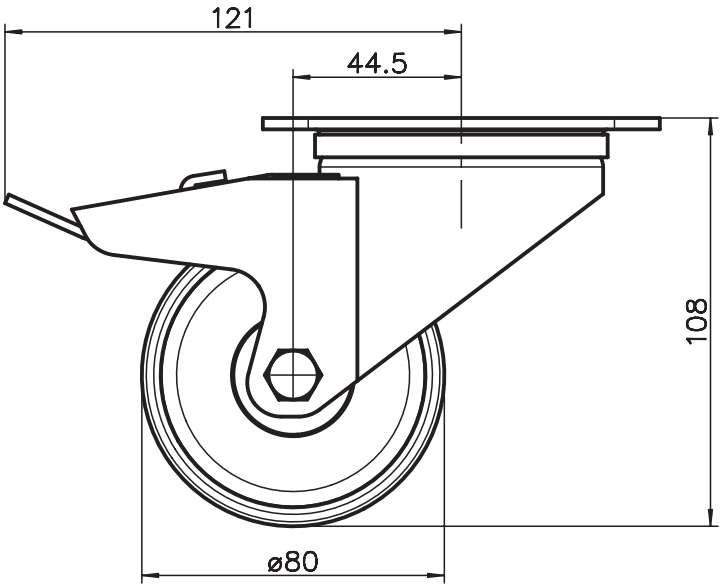

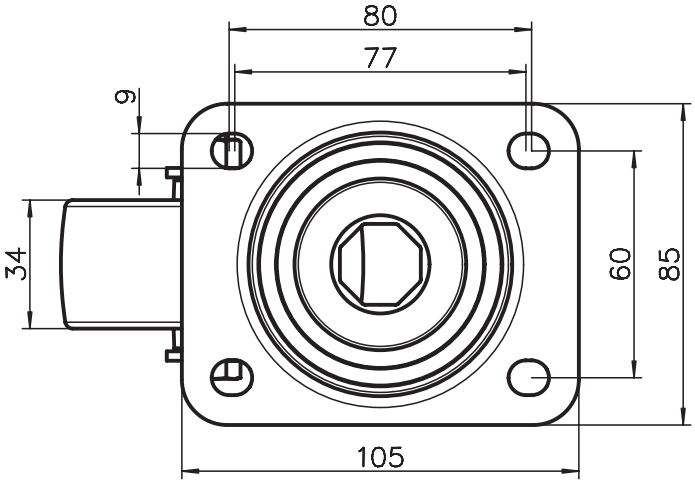

Application

These casters with backplate can be screwed directly into the extrusion slot. Can even be used on workstations or storage racks, any application where mobility is required.

Specification

Fork:	zinc-coated steel, ball bearing
Wheel:	PO, ball bearing

Order data		Order number	
	F	without lock	with lock
Caster	2000 N	B48–80	B48–81

Rollers

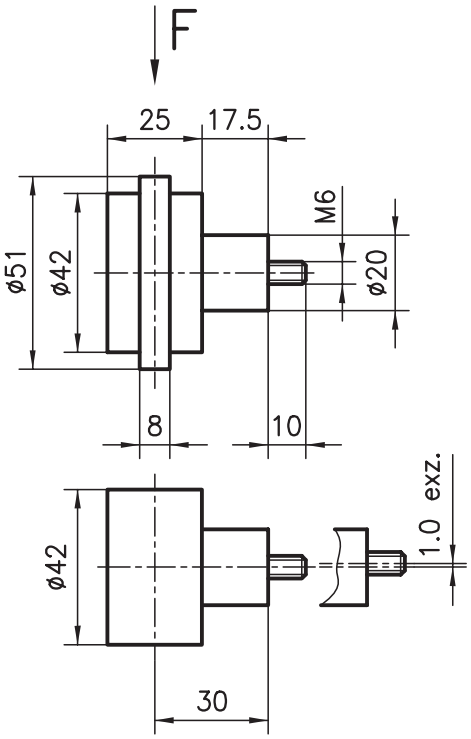

Application
This roller is suitable for heavy sliding doors, as a wheel for workpiece holders or for general structures which have to move freely.
Insert the guide flange into the extrusion slot. Fit the flat roller onto the other side. This creates the perfect trolley/rail combination independent of the extrusion tolerance.

Specification
Plastic roller, ball bearing mounted, steel spacer, gunmetal finish
Radial load
F = 500 N

Order data	Order number	
	Centric	**Eccentric**
Roller with guide flange	C48–00	C48–01
Roller without guide flange	C48–10	C48–11

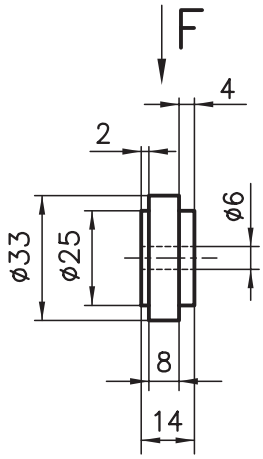

Application
This ball bearing-mounted roller is mainly used in an assembly with the trolley extrusion, although it can also be attached directly to any extrusion.

Specification
PA 6 black
2 deep groove ball bearings with cover disks
F = 150 N

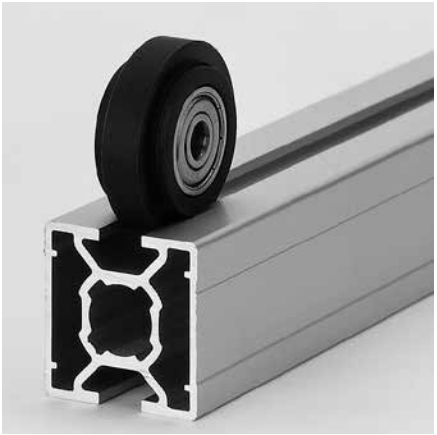

Order data	Order number
Roller PA	B48–05

Concave roller

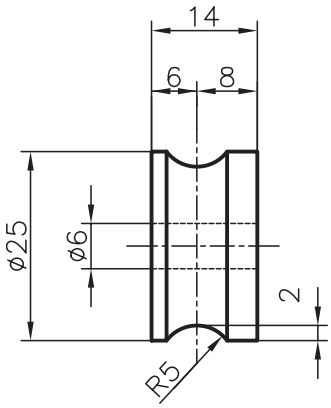

Application
This ball bearing-mounted roller is mainly used in an assembly with the trolley extrusion. It can however also be attached directly to any extrusion. The corresponding aluminium guide extrusion type B19–8 is used to produce an inexpensive roller guide in next to no time.

Specification
Plastic PA 6 black
2 deep groove ball bearings with cover disks
F = 150 N

Order data	Order number
Roller, concave	B48–10

Concave double-wheeled trolley

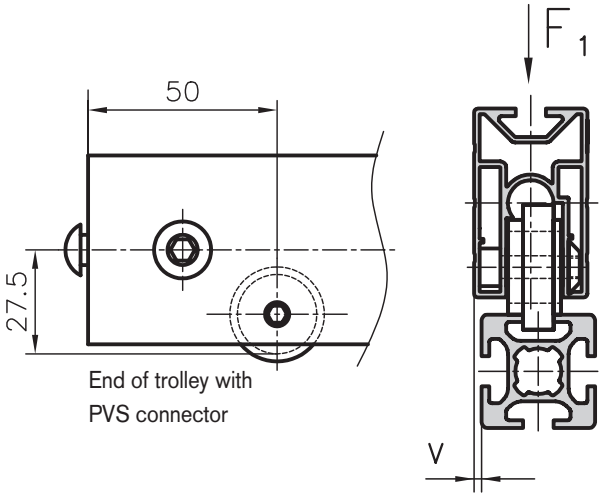

Double-wheeled trolley

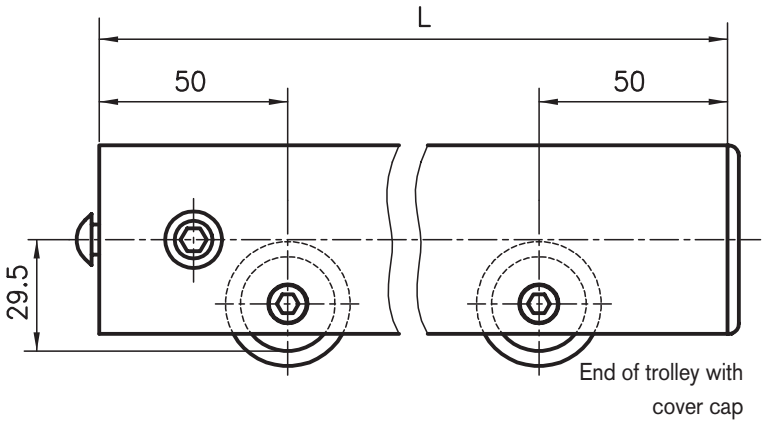

Application

A wide range of different applications is possible with the double-wheeled trolley. It provides a simple and mechanically reliable way of creating equipment chassis, sliding doors, lifting devices etc. Any lengths of extrusion can be used. However, the spaces between rollers should not exceed 1000 mm for large trolleys.

Trolleys are also available with more than 2 rollers.

Using the concave rollers, together with the aluminium extrusion guide B19–8 on page 132, it is easy to produce easy cleaning guides.

Parts supplied

Aluminium extrusion with ≥ 2 rollers.

PVS connector and/or cover caps fitted.

End of trolley (page 171) with PVS connector

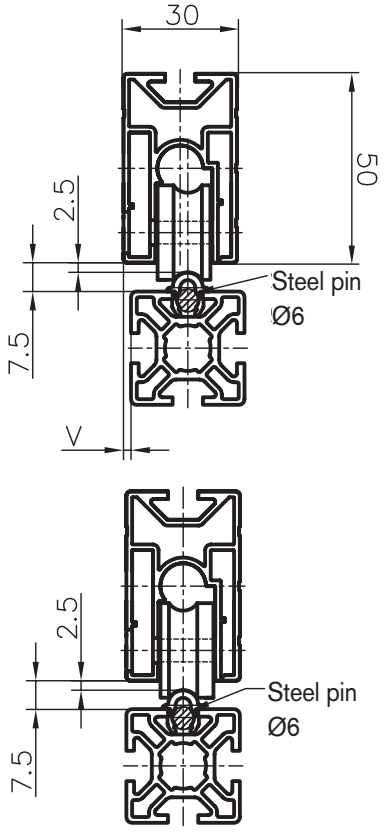

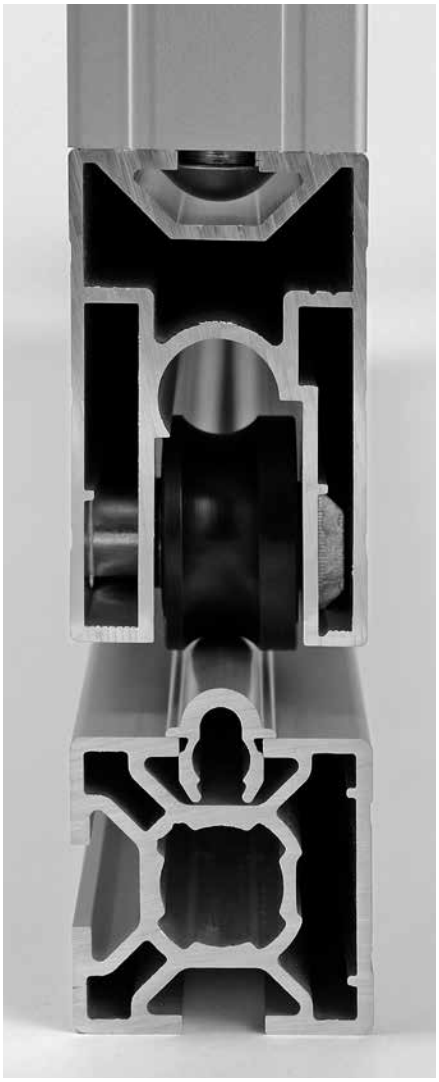

Order data		Order number	
		v = 0 mm	v = 2 mm
Double-wheeled trolley	L= … with cover caps	B37–52–02–02/…	B37–53–02–02/…
Double-wheeled trolley	L= … with PVS connector	B37–52–10–10/…	B37–53–10–10/…
Concave double-wheeled trolley	L= … with cover caps	B37–12–02–02/…	B37–13–02–02/…
Concave double-wheeled trolley	L= … with PVS connector	B37–12–10–10/…	B37–13–10–10/…

Plastic slide extrusions

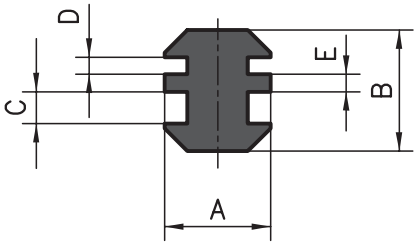

Specification
Black PE
Sliding friction coefficient: 0,2
Heat resistance to DIN 53461:
–250 °C to 100 °C
Indentation hardness to DIN 53456:
39N/mm²

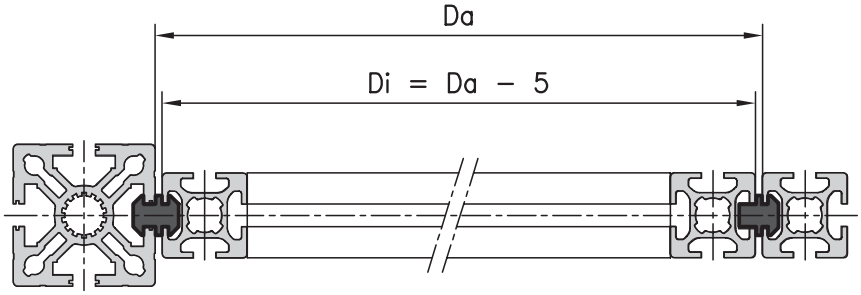

Measurement data

Extrusion base	A	B	C	D	E
50/40	21	21	4.1	4.1	2.3
50/40–30/20	14	16	4.1	2.2	2.3
30/20	14	14	2.2	2.2	2.3

Application
Ideal for any shape of slide guide, for instance for sliding doors or drawer runners. Simply push the slide extrusion into the aluminium extrusion slots – you can create a perfect, hard-wearing guide as easily as that.
Make the inner frame 5 mm smaller than the inner width of the outer frame. It is also ideal for static extrusion assemblies.

Order data	Order number
Plastic slide extrusion	**Base of 50/45/40**
Standard length 5000 mm	A39–00–00/5000
Cut to length	A39–00–02–02/ …
Plastic slide extrusion	**Base of 50/45/40 – 30/20**
Standard length 5000 mm	AB39–00–00/5000
Cut to length	AB39–00–02–02/ …
Plastic slide extrusion	**Base of 30/20**
Standard length 5000 mm	B39–00–00/5000
Cut to length	B39–00–02–02/ …

Order data	Order number
Plastic slide extrusion	**Base of 50/45/40**
Standard length 5000 mm	A39–05–00/5000
Cut to length	A39–05–02–02/…
with 2mm offset	
Standard length 5000 mm	A39–02–00/5000
Cut to length	A39–02–02–02/…
Plastic slide extrusion	**Base of 30/20**
Standard length 5000 mm	B39–05–00/5000
Cut to length	B39–05–02–02/…
with 2mm offset	
Standard length 5000 mm	B39–02–00/5000
Cut to length	B39–02–02–02/…

Base of 50/45/40

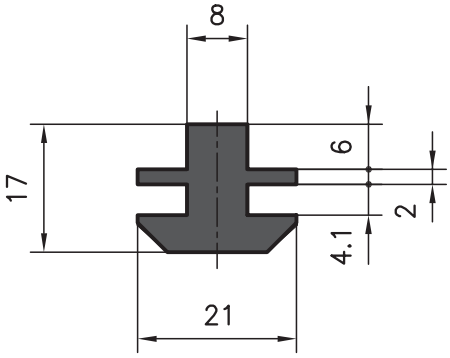

Base of 50/45/40 with offset

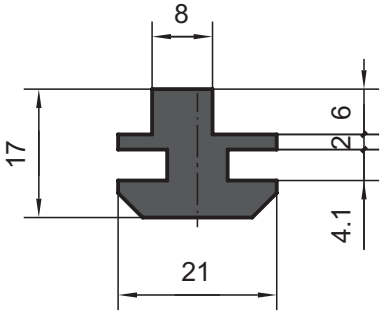

Base of 30/20

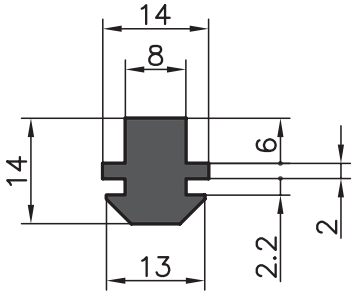

Base of 30/20 with offset

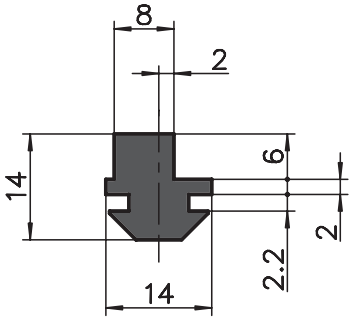

Base of 50/45/40

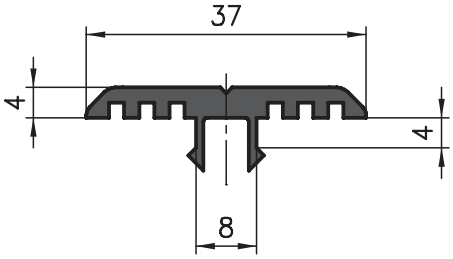

Base of 30

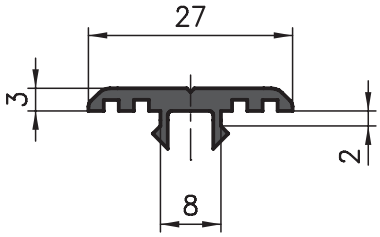

Application
This slide extrusion is mounted on the extrusion, acting as a sliding carrier for goods or pallets. The slide extrusion can also be used as a protective strip.

Specification
PP with Talkum 30%, black

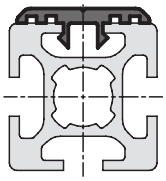

Order data	Order number
Plastic slide extrusion	**Base of 50/45**/40
Standard length 5000 mm	AC39–20–00/5000
Cut to length	AC39–20–02–02/…
Plastic slide extrusion	**Base of 30**
Standard length 5000 mm	B39–20–00/5000
Cut to length	B39–20–02–02/…

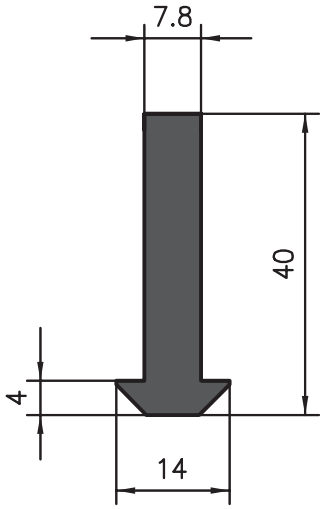

Application
For single sliding doors, suspended fittings, cable supports and many other uses. Fits all standard KANYA extrusions.

Specification
PE, black

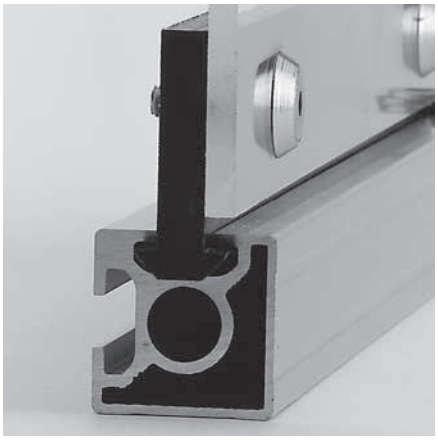

Order data	Order number
Plastic slide extrusion	**Base 50/45/40/ 30/20**
Standard length 5000 mm	A69–0–00/5000
Plastic slide extrusion	
Cut to length	A69–0–02–02/…

Sliding hook

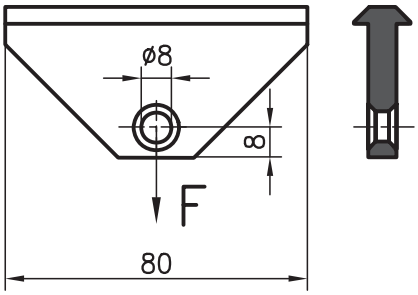

Application
The sliding hook is ideally suited for suspended tool applications or as a cable guide. It is simply pressed into the extrusion slot and moves freely. Other lengths of multiple-hole versions are available on request.

Specification:
Slider: PE, black
made from a plastic slide extrusion, A69–0–00
load-bearing capacity: F = 300 N
Spring hook: chromium-plated steel

Order data	Order number
No spring hook	A69–00
With a spring hook	A69–01

Cable ducts

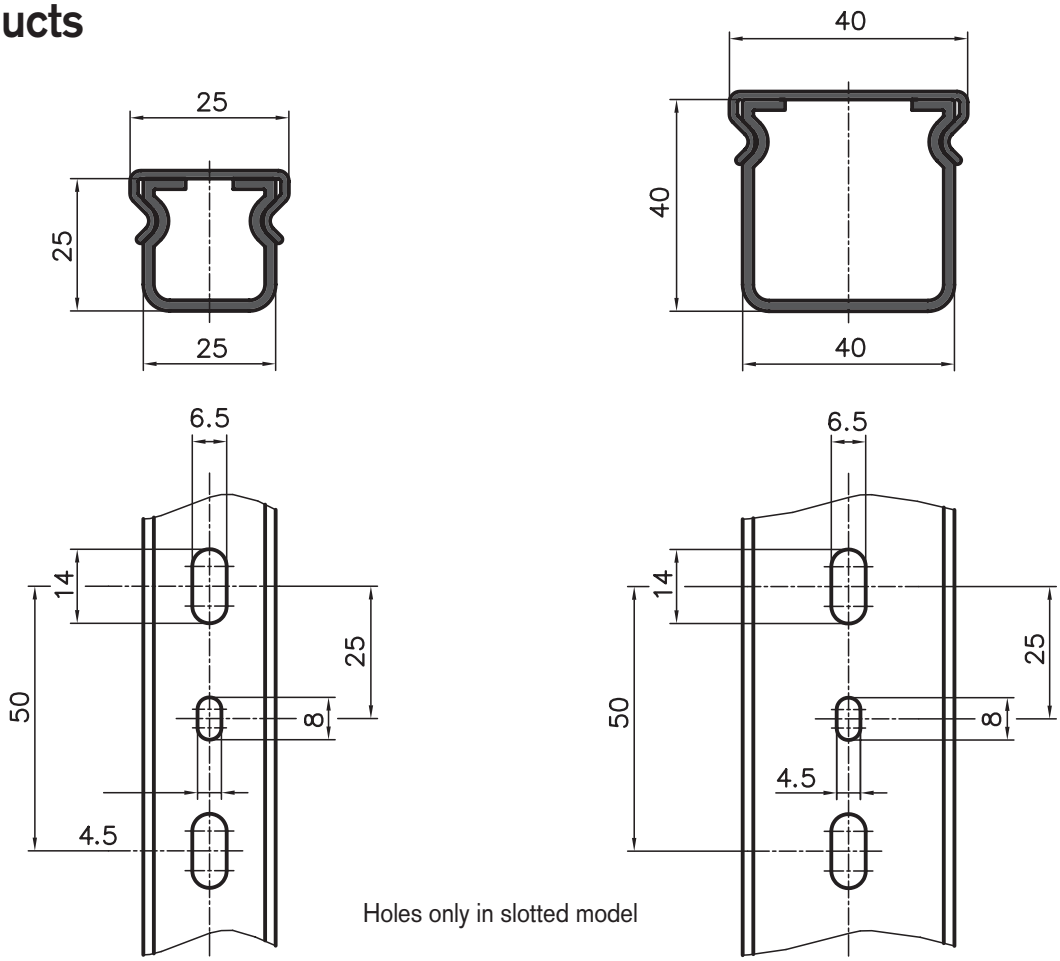

Holes only in slotted model

Application
The cable ducts are placed directly onto the extrusions and are secured using either the retaining clips (see page 179) or extrusion nuts available. The duct is easy to open or close any time as it is fitted with a press-on cover. The slotted sides enable cables to be fed in and out at any point.

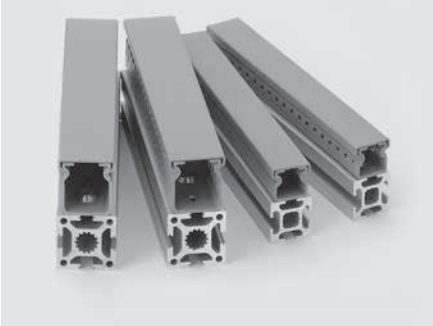

Specification
UPVC, light grey

Order data		Order number	
Cable ducts		**closed**	**slotted**
40mm wide cable duct	standard length	C38–00–00/2000	C38–01–00/2000
	Cut to length	C38–00–02/…	C38–01–02/…
25mm wide cable duct	standard length	B38–00–00/2000	B38–01–00/2000
	Cut to length	B38–00–02/…	B38–01–02/…

Other dimensions on demand

Aluminium cable ducts 40x40, 40x80, 80x80

Application
The cable ducts can be placed directly onto the extrusions and secured using screws and threaded plates / extrusion nuts. The duct is easy to open or close any time as it is fitted with a press-on cover.

Description
Size 40x40mm, 40x80 and 80x80

Specification
Anodised aluminium

Aluminium cable duct with cover

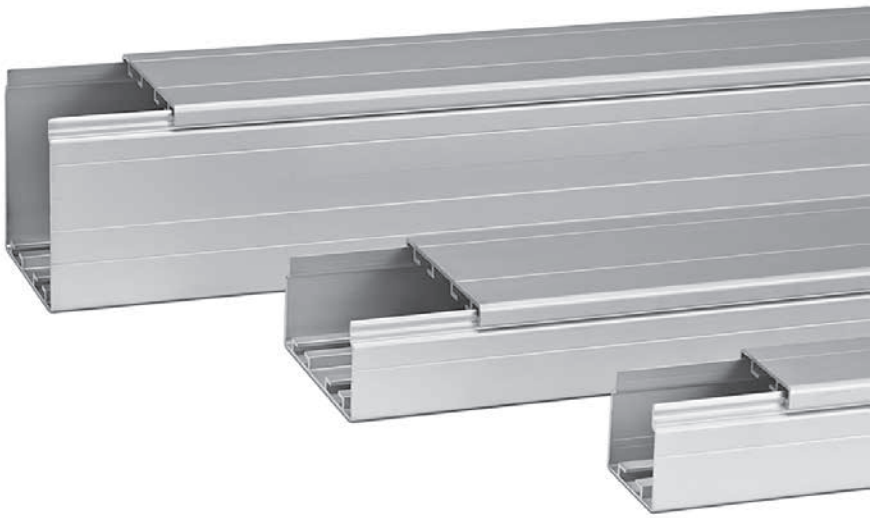

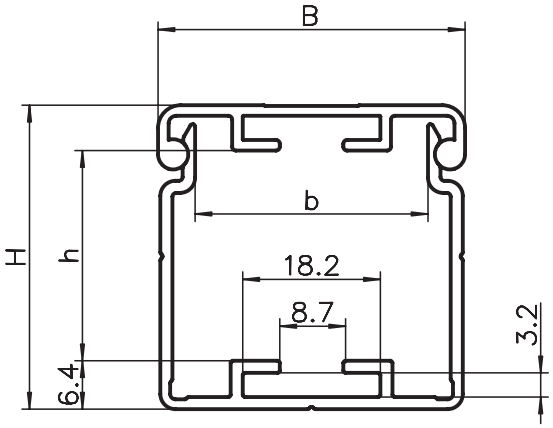

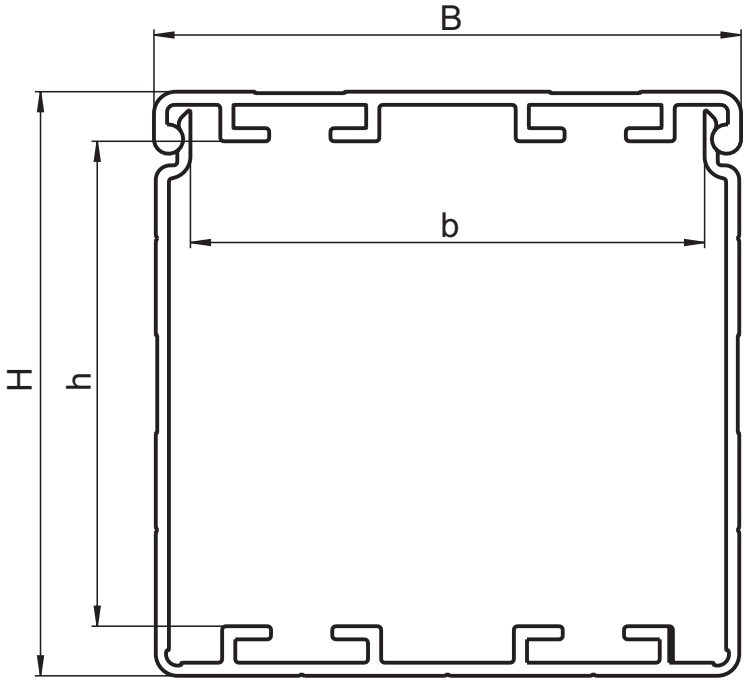

Dimension

HxB	b	h	Slot
40x40	30.8	27.8	1
40x80	70.5	27.8	2
80x80	70.5	66.5	2

Order data	Order number
Aluminium cable duct 40x40 (B=40, H=40) incl. cover	
Standard length 6000 mm	C38–11–00/6000
Cut to length	C38–11–02–02/...

Order data	Order number
Aluminium cable duct 40x80 (B=80, H=40) incl. cover	
Standard length 6000 mm	C38–21–00/6000
Cut to length	C38–21–02–02/...

Order data	Order number
Aluminium cable duct 80x80 (B=80, H=80) incl. cover	
Standard length 6000 mm	C38–31–00/6000
Cut to length	C38–31–02–02/...

Front cover

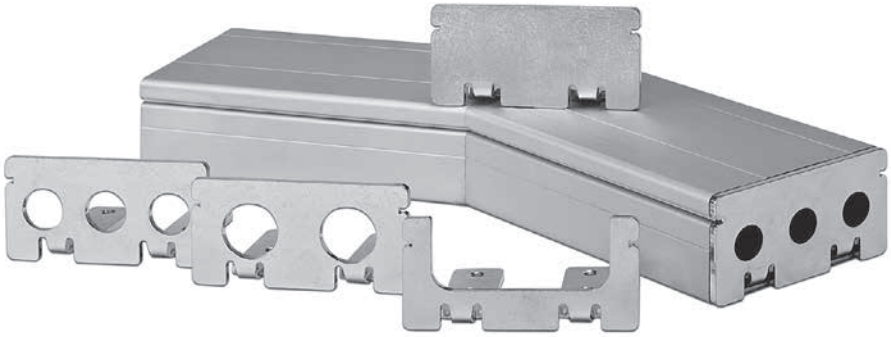

Application
A range of different covers and designs are available for the aluminium cable ducts 40x40, 40x80 and 80x80 to cover the open cross-sections. Available with or without outlet holes for possible cable passage.

Specification: Zinc-coated steel

Parts supplied:
Front cover with adjusting screws

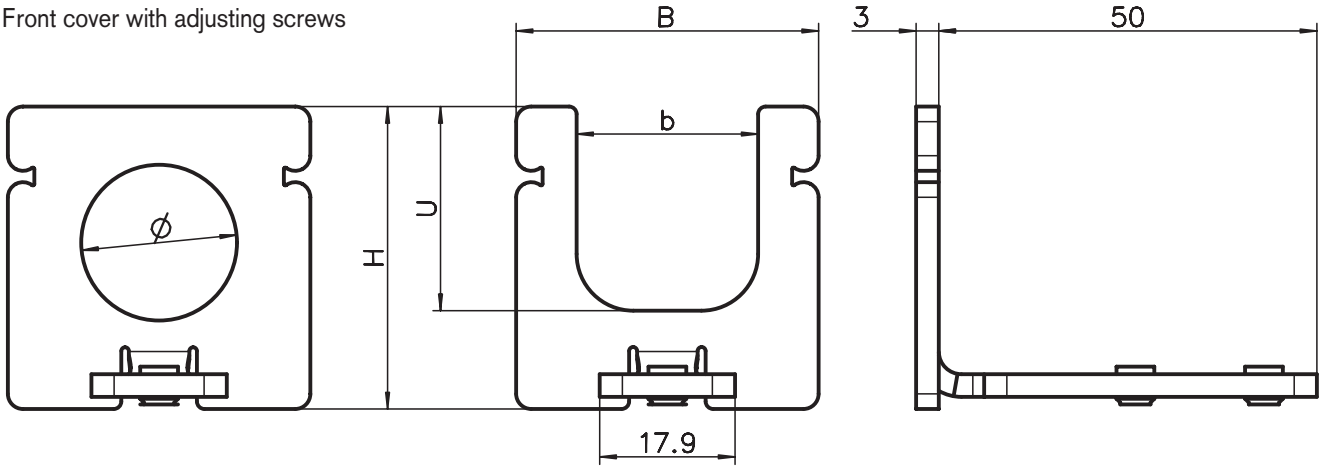

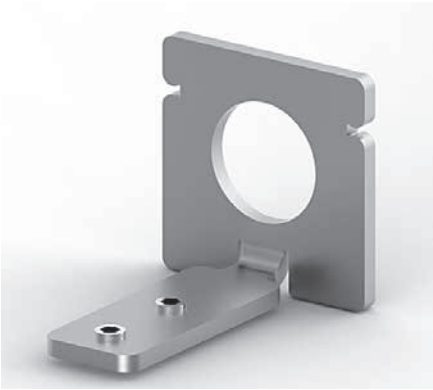

Design with Ø 40x40

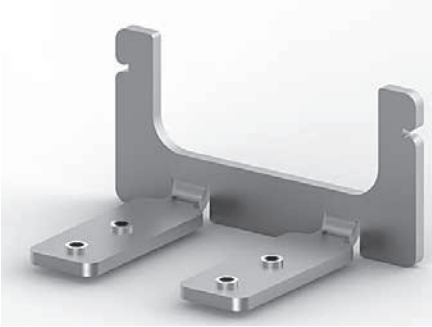

Design with U-shape 40x80

Closed design 80x80

Design 40x40	Order number
closed	C38–14
U-shape 24x27mm (Uxb)	C38–15
1x Ø20.6	C38–18

Design 40x80	Order number
closed	C38–24
U-shape 26x60mm (Uxb)	C38–25
3x Ø16	C38–26
2x Ø20.6	C38–28

Design 80x80	Order number
closed	C38–34
U-shape 60x66mm (Uxb)	C38–35
4x Ø16	C38–36
4x Ø20.6	C38–38

Cable duct connector

Application
The connectors are used to extend the cable ducts and create a 90° mitred connection (other angles on request). 2 connectors are required for the aluminium cable ducts 40x80 and 80x80. The threaded pins used to fix the ducts are included with the parts supplied.

Specification: zinc-coated steel
Adjusting screws: M5

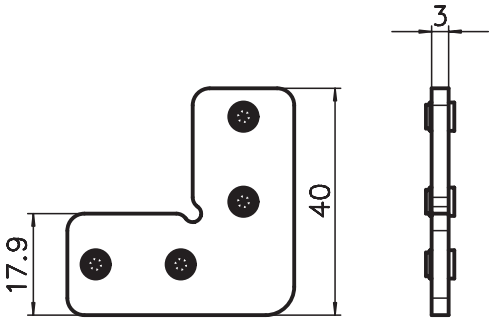

Connector, straight

Connector, 90°, other angles on request

Order data	Order number
Connector, 90°	C38–90
Connector, straight	C38–91

Covering cap for front cover

Application
The covering cap is used to cover unecessary openings on the front plates.

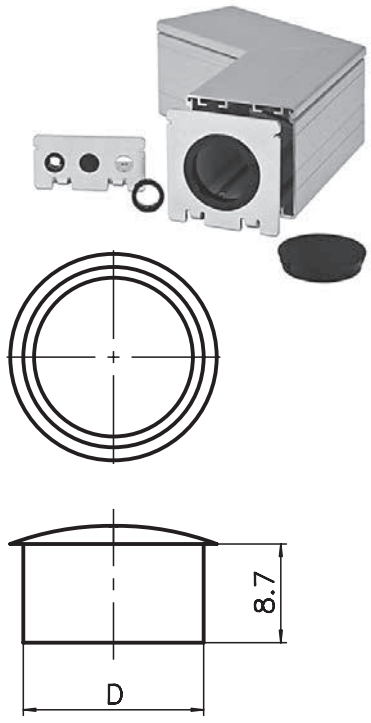

Plastic, black

Order data	Order number
Ø 16	C38–46
Ø 20	C38–47

Cable passage to front cover

Application
This edge protection is used at places where cables need to be fed through the cable duct on the front face. Available for the relevant holes in the front covers.

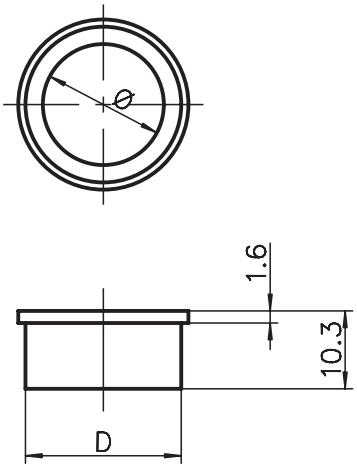

Plastic, black

Order data		Order number
D= 16	Ø 12.7	C38–56
D= 20	Ø 16	C38–57

Retaining clips

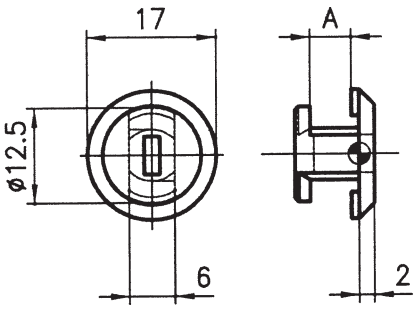

Application
The quarter turn retaining clips allow the easy fixing of either cable ducts or thin sheet material onto the extrusions Base 50, 45, 40 and 30.

Specification
PA-GF, black

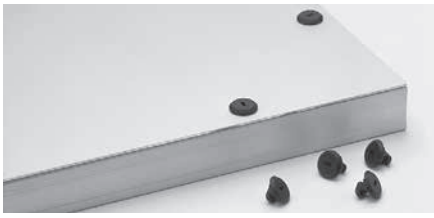

Order data	Order number
Retaining clips A = 5.5	AC38–20
Retaining clips A = 3.5	B38–20

«Velcro» Cable ties

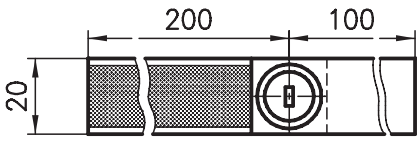

tie wrap «base»

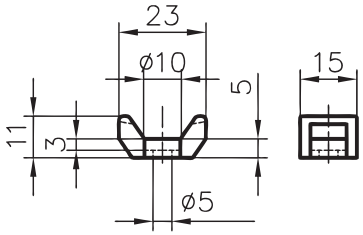

Application
This universal cable tie is made from a combination of Velcro material and a retaining clip. The Velcro can be cut to length with scissors. The quarter turn retaining the clip ensures easy fixing to the extrusions Base 50,40 and 30.
On the tie-wrap-base you can fix standard tie wraps. Fix with a M5-screw

Specification

Clips:	glass-filled Polyamide (PA-GF) black
Ribbon:	Velcro black
Tie wrap Base:	PA black

Order data	Order number
	Extrusion base
Cable ties «Velcro»	**50/45/40 30**
	B50–50 B50–53
Tie wrap «Base»	**50/45/40/30/20**
	B50–55

Installation rings

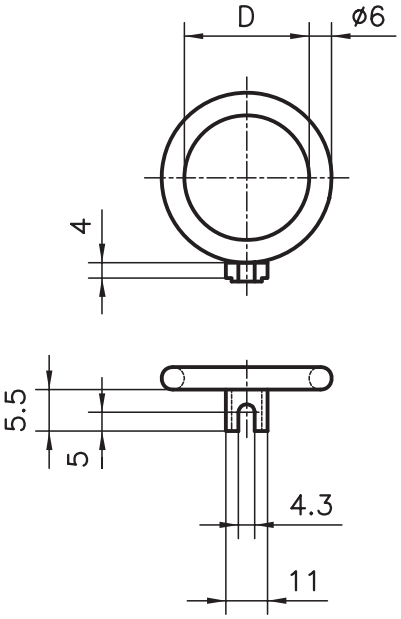

Application
Installation rings are ideal for holding cables and pipes in place, and as tool holders. The rings can be fixed into the 8 mm extrusion slot using an M4 screw. They are held in place without twisting in the slot. There are two different diameters of rings available to cover the various possible applications.

Specification
PA-GF, black

Order data		Order number
	D	
Installation ring	Ø 18	B50–20
Installation ring	Ø 33	B50–30

End caps

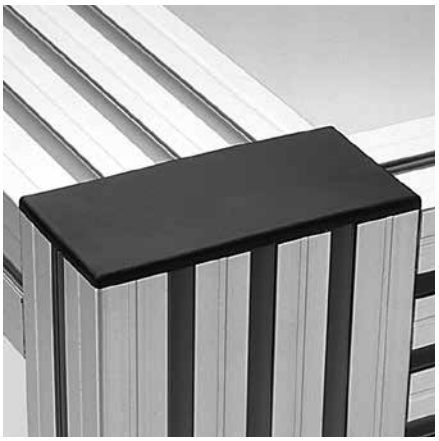

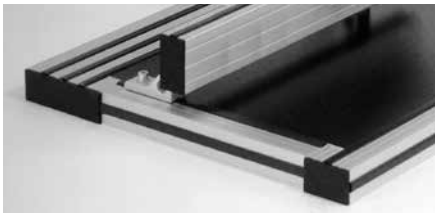

Application
End caps are used as covers for the exposed ends of extrusions. They prevent injury from the sharp edges of the extrusions. Special centring elements make them easy to fix and prevent the caps from twisting. Two end caps can be used together to cap off larger extrusions, eg extrusion 80x120 uses two 40x120 end caps.

Specification
PA-GF, black / -G grey

Extrusion	Cap height
Base of 50 / 45 / 40	4 mm
Base of 30 / 20	3 mm

Order data		Order number
End caps	50x50	A40–10 (–G)
End caps	50x50	A40–19 (extr. A19–1)
End caps	50x45°	A40–80
End caps	50x100	A40–20 (–G)
End caps	50x150	A40–30
End caps	100x100	A40–50 (–G)
End caps	45x45	E40–10
End caps	45x90	E40–30
End caps	90x90	E40–50
End caps	45x45	E40–83 (extr. E03–1)
End caps	40x40	C40–10 (–G)
End caps	40x40	C40–83 (extr. C03–8)
End caps	40x45°	C40–80 (extr. C02–8)
End caps	40x45°	C40–84 (extr. C04–4)
End caps	40x80	C40–30 (–G)
End caps	40x120	C40–90
End caps	80x80	C40–40 (–G)

Order data		Order number
End caps	30x30	B40–30 (–G)
End caps	30x30	B40–80 (extr. B01–8)
End caps	30x30°	B40–33
End caps	30x45°	B40–45
End caps	30x60°	B40–66
End caps	30x50	B40–90
End caps	30x60	B40–60 (–G)
End caps	30x95	B40–50
End caps	30x100	B40–20
End caps	30 8-Kt.	B40–15
End caps	60x60	B40–65
End caps	20x20	D40–30 (–G)
End caps	20x20	D40–80 (extr. D03–8)
End caps	20x40	D40–60
End caps	20x50	D40–50

Aluminium filler strip

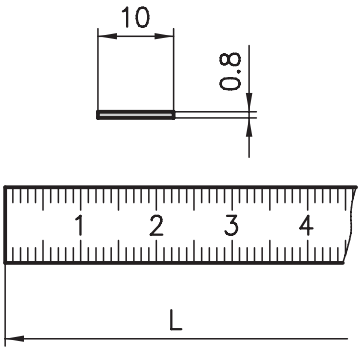

Application
These aluminium strips can be used to blank off the longitudinal slots on all extrusions with a base of 40, 45 and 50. They are extremely easy to cut to length using tin snips or shears. They can be supplied at short notice in any RAL colour in addition to the standard colours (natural anodised or black powder coated).

Specification
Aluminium 0.8x 10
anodised or black
anodised with millimetre scale

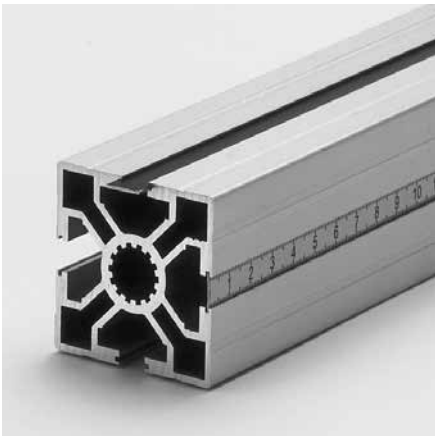

Order data	Order number	
Filler strip	**black**	
L = 1000 mm	A39–10	
L = 2000 mm	A39–12	
Filler strip	**anodised**	**mm-scale**
L = 1000 mm	A39–15	A39–16
L = 2000 mm	A39–17	A39–18

PVC filler strips

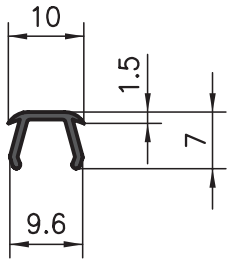

Application
The PVC filler strip can be clipped into the 8 mm longitudinal slot on any extrusion after assembly and is available in grey or black.

Specification
Grey or black PVC

Order data	Order number
Filler strips	**grey**
Standard length 5000mm	A39–25–00/5000
Cut to length	A39–25–02–02/…
Filler strips	**black**
Standard length 5000mm	A39–26–00/5000
Cut to length	A39–26–02–02/…

Channel reducing strip

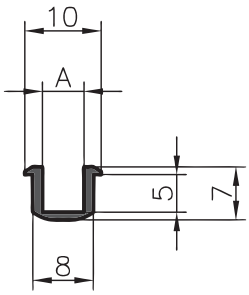

Application
Channel reducing strips are used if 3, 4 or 5 mm panels are to be inserted into the extrusion slots.

Specification
Grey PVC for panels of 3, 4 or 5 mm in thickness
Plate insertion depth: 4 mm

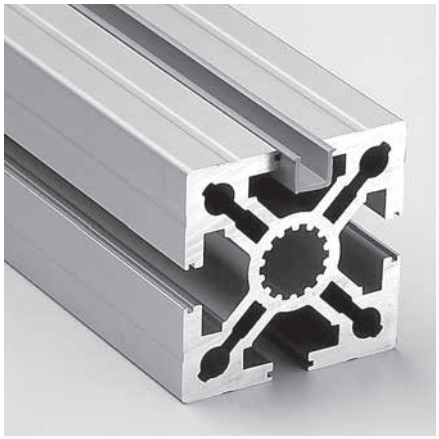

Order data	Order number
Channel reducing strip	**A = 3,5 mm**
Standard length 5000 mm	A39–33–00/5000
Cut to length	A39–33–02–02/…
Channel reducing strip	**A = 4,5 mm**
Standard length 5000 mm	A39–32–00/5000
Cut to length	A39–32–02–02/…
Channel reducing strip	**A = 5,5 mm**
Standard length 5000 mm	A39–34–00/5000
Cut to length	A39–34–02–02/…

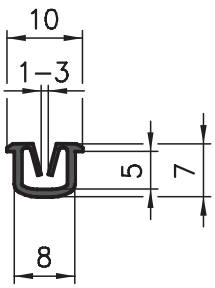

Application
For thin sheets eg expanded metal, steel sheets, etc.

Specification
Grey PVC for panels up to 3 mm
Plate insertion depth: 4 mm

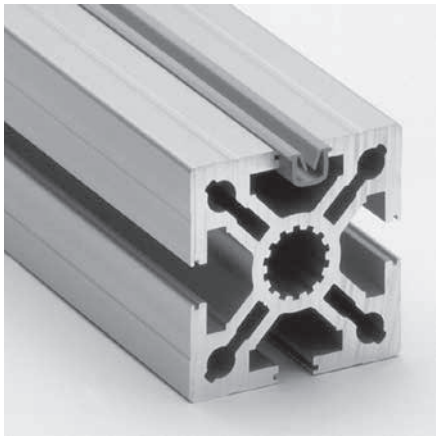

Order data	Order number
Channel reducing strip	
Standard length 5000 mm	A39–31–00/5000
Cut to length	A39–31–02–02/…

Channel reducing strips and filler strips

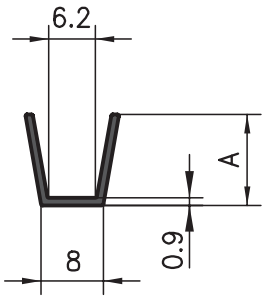

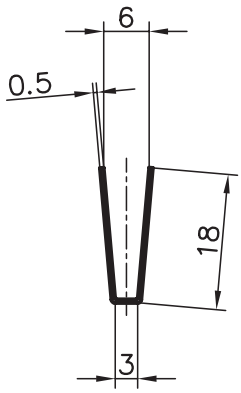

Application
To hold panels which are 6 mm thickness. They can also be inverted to blank off the slots on triple channel extrusions.

Specification
Grey PVC for panels of 6 mm in thickness
Panel insertion depth: 11 mm

Application
When fitting 3mm panels for base 40 panels extrusions.

Specification
Black PVC

Order data	Order number
Channel reducing strip	**extrusions 50**
A = 14.5 mm	
Standard length 5000 mm	A39–50–00/5000
Cut to length	A39–50–02–02/…
Channel reducing strip	**extrusions 45 / 40***
A = 10 mm	
Standard length 5000 mm	C39–50–00/5000
Cut to length	C39–50–02–02/…
Channel reducing strip	**extrusions 30**
A = 6.5 mm	
Standard length 5000 mm	B39–50–00/5000
Cut to length	B39–50–02–02/…
Channel reducing strip	**extrusions B05–1**
A = 12 mm	
Standard length 5000 mm	B39–55–00/5000
Cut to length	B39–55–02–02/…

* with 45 mm basis not available as filler strips

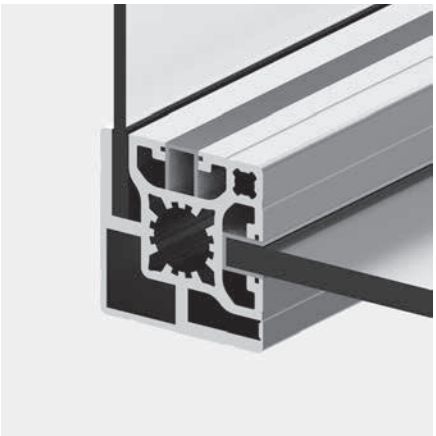

Order data	Order number
Channel reducing strip	**Base 40**
Standard length 5000 mm	C39–63–00/5000
Cut to length	C39–63–02–02/…

H-strip

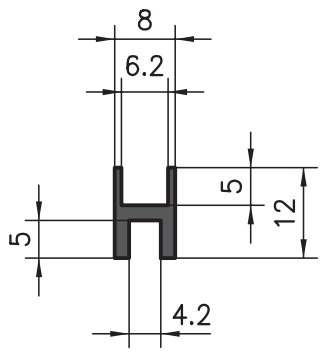

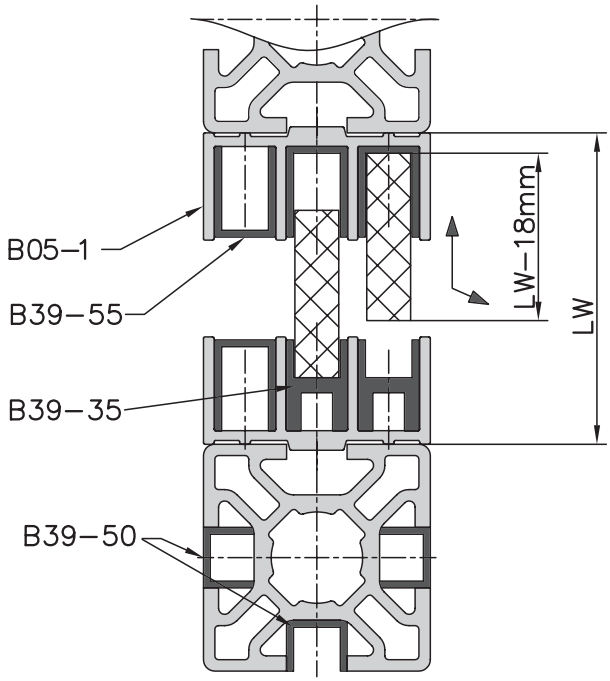

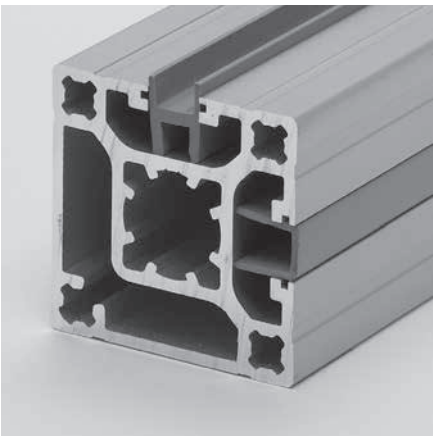

Application
Used in combination with the B39–55 channel reducing strip, this H-strip allows lift-on or lift-off panels to be inserted or removed.

Bottom: B39–35
Top: B39–55

Specification
Grey PVC for panels of 4 or 6 mm in thickness

Order data	Order number
H-strip	**extrusions B05–1**
Standard length 5000 mm	B39–35–00/5000
Cut to length	B39–35–02–02/…

Supporting extrusion

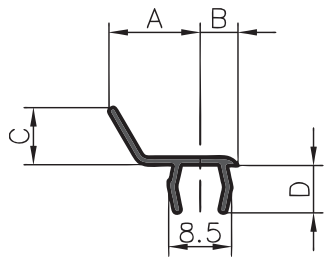

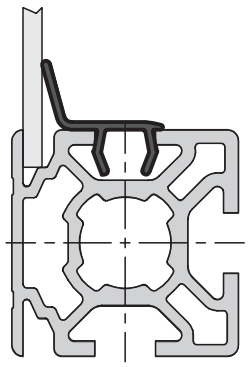

Application
The supporting extrusion has two functions:
1. It gives optimum support (pressure) to thin panels which are inserted into the narrow slots.
2. At the same time it also covers the extrusion connector slots.

Specification
Suitable for panel thickness of 2–4 mm
Grey PVC

Measurement data

Extrusion base	A	B	C	D
30	13	5	8	6
40	15	7	10	9

Wedge extrusion

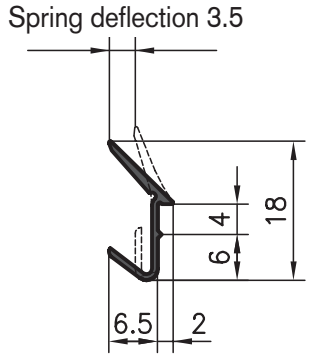

Application
The wedge extrusion can be pressed into the slot on extrusions with a base of 40, 45 and 50 mm. The force holds the panels tightly in place, however thick they are.

Specification
Grey PVC

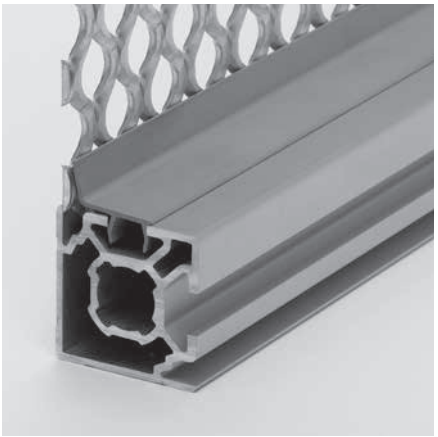

Order data	Order number
Clamping extrusion 30	
Standard length 5000 mm	B39–25–00/5000
Cut to length	B39–25–02–02/…

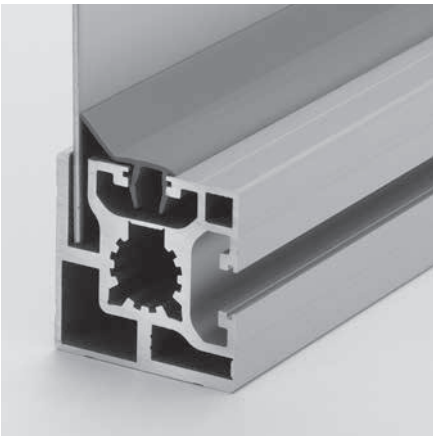

Order data	Order number
Supporting extrusion 40	
Standard length 5000 mm	C39–25–00/5000
Cut to length	C39–25–02–02/…

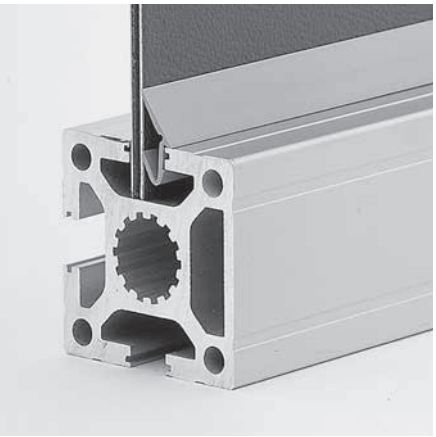

Order data	Order number
Wedge extrusion	
Standard length 5000 mm	C39–45–00/5000
Cut to length	C39–45–02–02/…

U clamp profile
Type A39–40

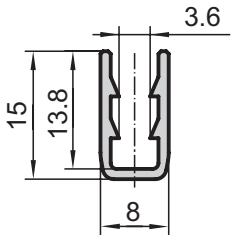

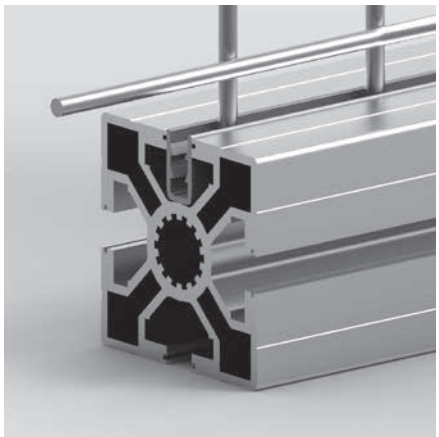

Application
This PVC plastic profile is used for the installation of the wire mesh panels. Due to pre-tension, it prevents the grids from rattling. Because of the material it can be cut to length with a good pair of scissors straight away during installation.

Specification
Hard PVC, grey

Order data	Order number
U clamp profile Standard length 5000 mm	A39–40–00/5000
U clamp profile Cut to length	A39–40–02–02/…

Door stop profile
Type C39–55

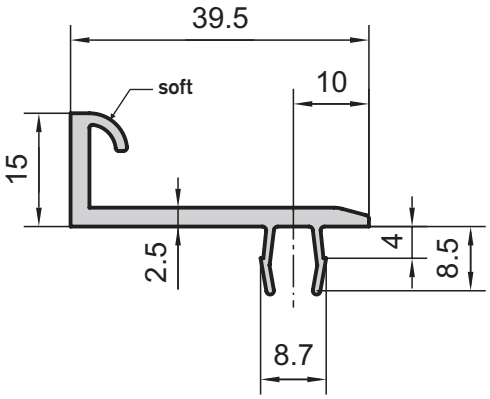

Application
As the name says, this profile is used as a door stop. The foot geometry means that it can be clipped into the basis 40, 45 and 50. The soft sealing lip muffles firstly the closing and facilitates a certain tightness. It should be ensured that the door gap is of a correspondingly large size.

Specification
Hard (soft) PVC, grey

Order data	Order number
Door stop profile Standard length 5000 mm	C39–55–00/5000
Door stop profile Cut to length	C39–55–02–02/…

Safety-edge extrusion

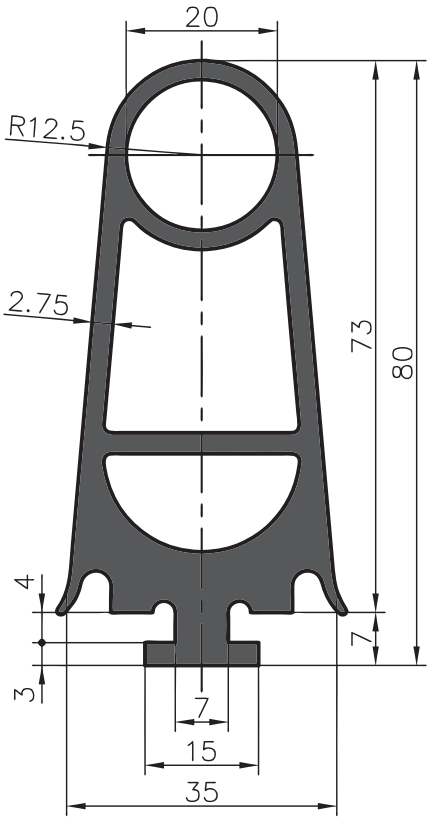

Application
Mainly used as a personal safety-extrusion on automatic sliding doors and everywhere there is danger of crushing parts. It fits to the respective KANYA-extrusions.

Specification
EPDM caoutchouc black

Order data	Order number
Saftey-edge extrusion	
Standard length 2000 mm	C39–90

Protective edge profile Base 30

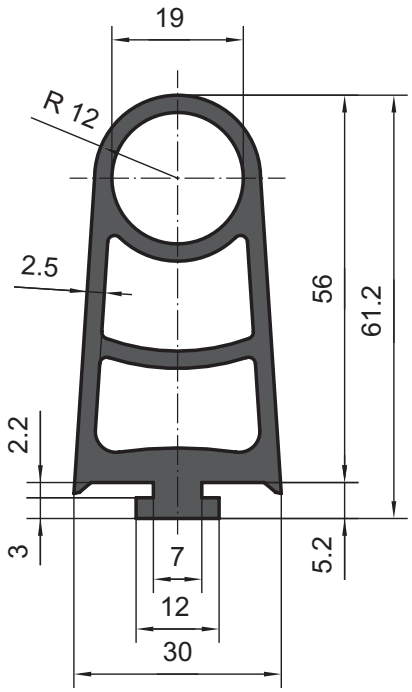

Order data	Order number
Protective edge profile	
Standard length 1900 mm	B39–90–00/1900
Protective edge profile	
Cut to length	B39–90–02–02/…

Semi-circular sealing strip

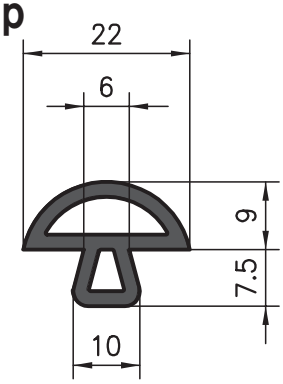

Application
Sealing strip for clean room technology and many other applications. Fits all standard KANYA extrusions.

Specification
Black neoprene rubber, oil-resistant.

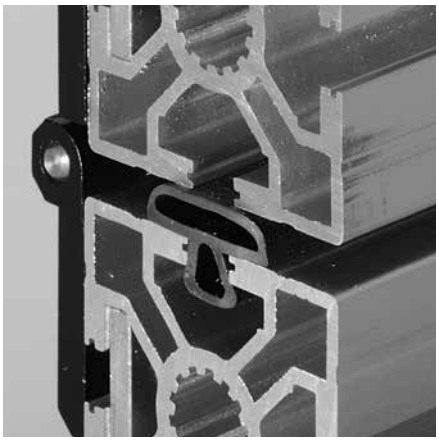

Order data	Order number
Semi-circular sealing strip	
Standard length of rolls of 25 m	A39–85–00
Cut to length	A39–85–02–02/…

Ribbed rubber extrusion

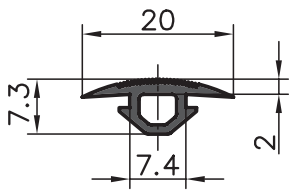

Application
The ribbed rubber extrusion can be used to protect the surface of extrusions, as an anti-slip strip or as a seal. This extrusion can be inserted into the slot of nearly all base 50, 45, 40, 30 and 20 cross-sections.

Specification
EPDM, black
Weight: 70g/m

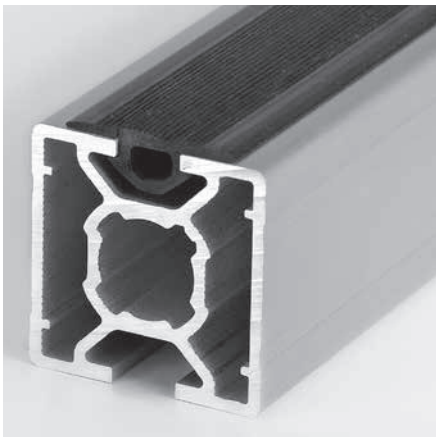

Order data	Order number
Ribbed rubber extrusion	
Standard length of rolls of 100 m	D39–86–00
Cut to length	D39–86–02–02/…

U-sealing strip

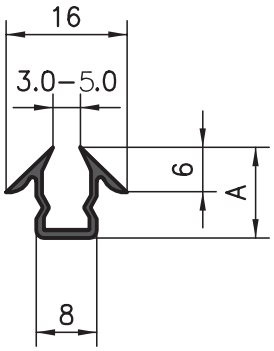

Application
This sealing strip can be inserted into the 8 mm slots on any extrusions and is suitable for panels measuring between 3 and 6 mm in thickness.

Specification
Black neoprene rubber, oil-resistant.
Installation depth for panels:
A = 12: 5 mm
A = 18: 10 mm

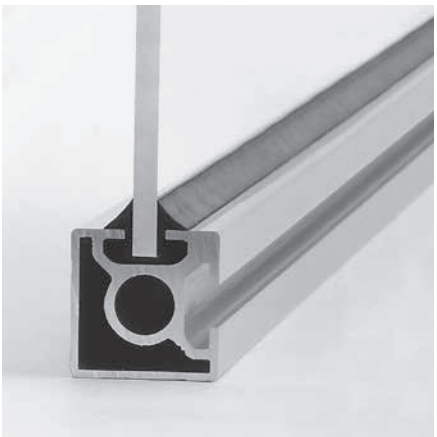

Order data	Order number
U-sealing strip, A = 12 mm	**45/40/30 mm base**
Standard length of rolls à 100 m	B39–65–00
Cut to length	B39–65–02–02/…
U-sealing strip, A = 18 mm	**50/45 mm base**
Standard length of rolls à 25 m	A39–65–00
Cut to length	A39–65–02–02/…

Grid extrusion

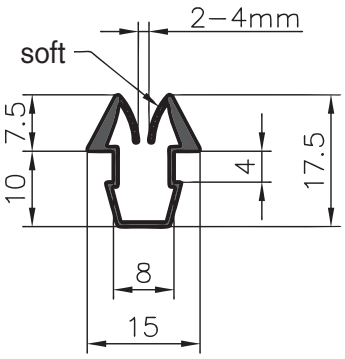

Application
Mainly used for holding steel-wire-mesh. The soft lips insulate the vibration and compensats the different thicknesses. It's qualified for panels with 2–4 mm thickness.
The grid extrusion fits into the base 50, 45 and 40.

Specification
Hard- (soft) PVC, black
Installation depth for panels: 8 mm

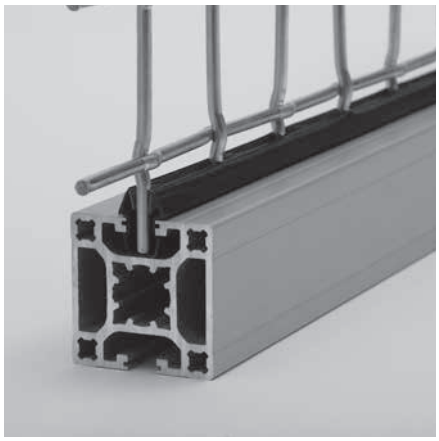

Order data	Order number
Grid extrusion	
Standard length 5000 mm	C39–70–00/5000
Cut to length	C39–70–02–02/…

Door sealing strip

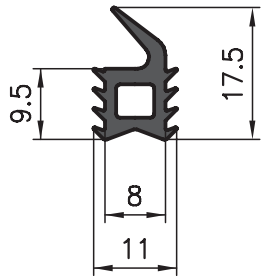

Application
Used to seal doors. Fits in all KANYA standard extrusions base 40, 45 and 50 – as does the semi-circular sealing strip.

Specification
Black soft PVC, oil-resistant, 57 Shore A

Order data	Order number
Door sealing strip	
Standard length 20 m	A39–88–00
Cut to length	A39–88–02–02/…

Clamping rubber seal

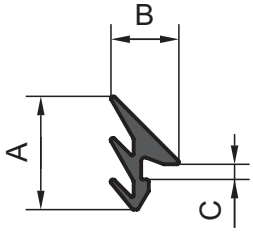

Application
These profiles are used for the installation of panels in the profile groove. The installation is done after the panels have been inserted. The rubber profiles can simply be pressed into the existing gap. The material automatically results in a damping, sealing and stabilising effect.

Measurement data

	A	B	C
AC39–86	16.5	9	4
AC39–87	18	11	4
B39–86	15	9	2
B39–87	17.3	11.6	2

panel thickness	1.5 – 3	4 – 5
Base 50 / 45 / 40	AC39–87	AC39–86
Base 30	B39–87	B39–86

Order data	Order number
Basis 50 / 45 / 40	
panel thickness 4 – 5 mm	
Standard length Roll: 200m	AC39–86–00
Cut to length	AC39–86–02–02/…
panel thickness 1.5 – 3 mm	
Standard length Roll: 200m	AC39–87–00
Cut to length	AC39–87–02–02/…
Basis 30	
panel thickness 4 – 5 mm	
Standard length Roll: 200m	B39–86–00
Cut to length	B39–86–02–02/…
panel thickness 1.5 – 3 mm	
Standard length Roll: 200m	B39–87–00
Cut to length	B39–87–02–02/…

Clamping sealing strip Base 30/20

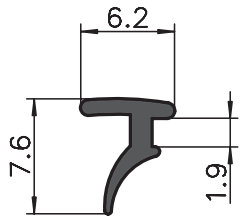

Application
This sealing strip is used to stabilise and seal panels in the extrusion cross-sections of base 20 and 30. It is fitted after the panels are inserted.

Specification
TPE black, oil-resistant
For panels 5–6 mm thick

Measurement data

Panels 5–6 mm thick

Order data	Order number
Clamping sealing strip 30/20 base	
Standard length of rolls à 100 m	B39–83–00
Cut to length	B39–83–02–02/…

Enclosure panels

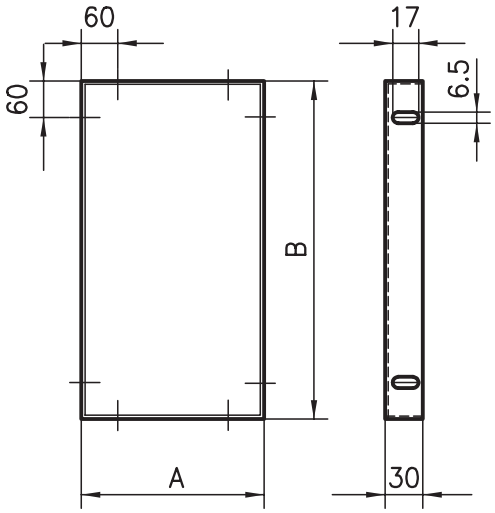

Application
These panels are used to strengthen and enclose structures which are subject to heavy loads. Sheet steel enclosure panels serve two functions; firstly, they ensure safety and secondly, they enclose the machines attractively.

Specification
1.25 mm sheet steel, powder coated, maximum size: 900 x 1500 mm
Colour: RAL shade requested by the customer
Weight: 11.2 kg/m²

Order data	Order number
Enclosure panel, state colour	B53–00 A x B

Aluminium sheets

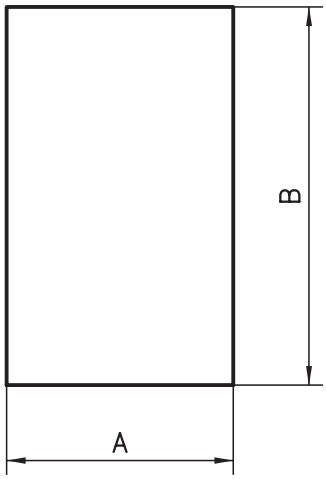

Application
All types of enclosures.

Specification
Al-sheet 1.5 and 3.0 mm
Anodised in a natural colour, one side with a protective sheet
Maximum size: 1000 x 2000mm
Steel-sheet 1.25 mm zinc-coated
Maximum size: 1000 x 2000 mm
Other dimensions or powder coated sheets are available on request
Weight: Al 1.5 mm: 4.05 kg/m²
Al 3.0 mm: 8.1 kg/m²
St 1.25 mm: 10.0 kg/m²

Order data	Order number
Aluminium sheet, 1.5 mm	A53–15 A x B
Aluminium sheet, 3 mm	A53–30 A x B
Steel sheet 1.25 mm	A53–51 A x B

Expanded metal

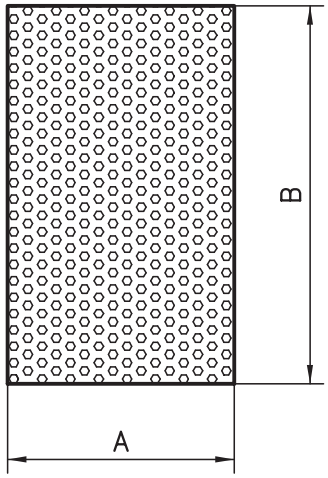

Application
The panel for designers with taste – light and attractive, but nonetheless sturdy. Can be used for virtually any purpose.

Specification
Aluminium 2 mm, raw
Maximum size: 1000 x 2000 mm
Weight: 2.0 kg/m²

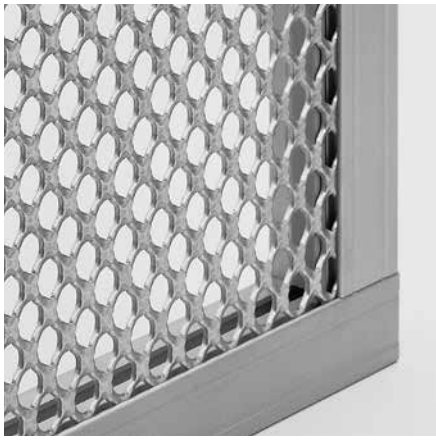

Order data	Order number
Expanded metal	A54–20 A x B

Composite panels

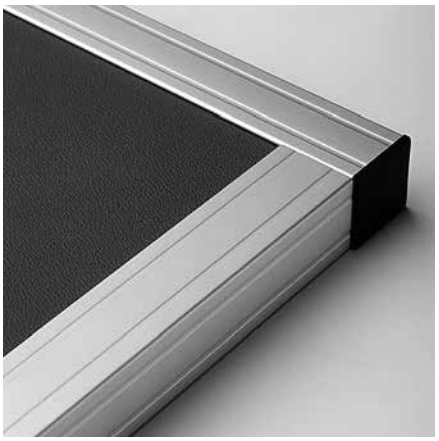

Application
Intrinsically high strength enclosure panels. The thicknesses of the panels fit the narrow slots of the different 30 mm base extrusions, guaranteeing a tidy finish.

«DIBOND» specification
Composite panel lined on either side with 0.3 mm thick aluminium sheets. Stove-enamelled on either side.

Thickness: 2.0 mm
Colour: aluminium metallic finish
Size: max. 1250 x 3050 mm
Weight: 2.9 kg/m²

Thickness: 3.0 mm
Colour: white, similar to RAL 9016
blue, similar to RAL 5002
black, similar to RAL 9005
Size: max. 1500 x 3050 mm
Weight: 3.0 mm: 3.8 kg/m²

«ALUCOBOND» specification
Composite panel lined on either side with 0.5 mm thick aluminium sheets.

Thickness: 4.0 mm
Surface: anodised in a natural colour on either side
Size: max. 1250 x 2500 mm
Weight: 5.5 kg/m²

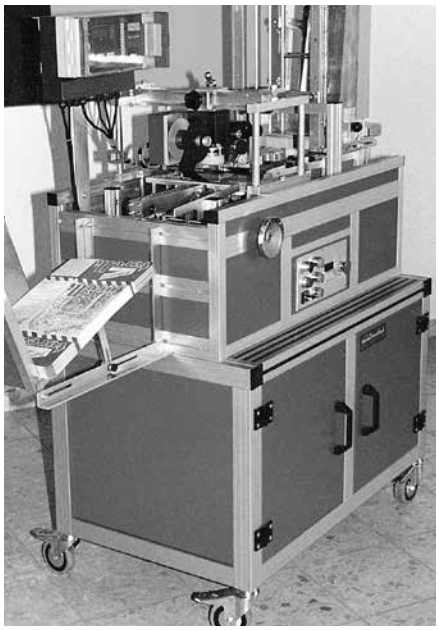

«DILITE» specification
Composite panel lined on either side with 0.2 mm thick aluminium sheets.

Thickness: 2.0 mm
Colour: white, similar to RAL 9016 and aluminium metallic finish
Size: max. 1250 x 3050 mm

Thickness: 3.0 mm
Colour: white, similar to RAL 9016
Size: max. 1500 x 3050 mm

Order data	Order number
DIBOND 2 mm	A51–12 A x B
DIBOND 3 mm, state colour	A51–13 A x B
DILITE 2 mm	A51–32 A x B
DILITE 3 mm	A51–33 A x B
ALUCOBOND 4 mm anodised	A51–22 A x B

Micro chipboard

Application
This inexpensive panelling is inserted directly into the 8 mm slot on extrusions. The panels are lined with a white film on either side. They are highly fire-retardant and are used most commonly in the construction of exhibition stands and shop fittings.

Specification
Plastic-coated pressboard.
Highly fire-retardant according to DIN 4102

Thickness: 8 mm
Size: max. 1390 x 2070 mm
Colour: white
Weight: 5.2 kg/m²

Order data	Order number
Micro dense fibreboard	A50–58 A x B

PET-G

Application
This transparent panel is food-safe and can be used in clean-room applications and medical technology. Metal machining and cold or hot forming is possible

Specification for Pet-G
impact-resistant, oil-resistant, food-safe

Colour:	clear as glass, transparent
Thicknesses:	3, 4, 5, 6, 8 mm
Size:	max. 2000 x 3000 mm
Weight:	3 mm: 4.14 kg/m²
	4 mm: 5.52 kg/m²
	5 mm: 6.90 kg/m²
	6 mm: 8.28 kg/m²
	8 mm: 11.0 kg/m²

Order data	Order number
PET-G plate 3 mm	A50–73 A x B
PET-G plate 4 mm	A50–74 A x B
PET-G plate 5mm	A50–75 A x B
PET-G plate 6 mm	A50–76 A x B
PET-G plate 8 mm	A50–78 A x B

Acrylic glass

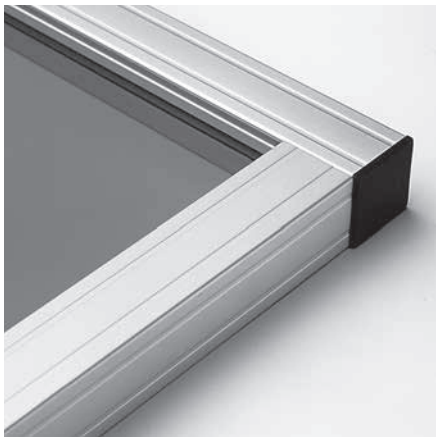

Application
For machine safety enclosures, room partitions and display cases. (suitable for metal machining). Hot forming possible using special tool.

Specification for acrylic glass

Colours:	clear as glass, or on request
Thicknesses:	3, 4, 5, 6, 8 mm
Size:	max. 2000 x 3000 mm
Weight:	3 mm: 3.55 kg/m²
	4 mm: 4.70 kg/m²
	5 mm: 5.90 kg/m²
	6 mm: 7.10 kg/m²
	8 mm: 9.45 kg/m²

Order data	Order number
Acrylic glass 3 mm	A50–13 A x B
Acrylic glass 4 mm	A50–14 A x B
Acrylic glass 5 mm	A50–15 A x B
Acrylic glass 6 mm	A50–16 A x B
Acrylic glass 8 mm	A50–18 A x B

Polycarbonate

Application
This panel is extremely impact-resistant and is used for windows and doors in safety guards. Metal machining and cold or hot forming is possible. We can provide blank cuts or ready-machined panels.

Specification for polycarbonate

Colours :	clear as glass
Thicknesses:	3, 4, 5, 6, 8 mm
Size:	max. 2000 x 3000 mm
Weight:	3 mm: 3.60 kg/m²
	4 mm: 4.80 kg/m²
	5 mm: 6.00 kg/m²
	6 mm: 7.20 kg/m²
	8 mm: 9.60 kg/m²

Order data	Order number
Polycarbonate 3 mm	A50–33 A x B
Polycarbonate 4 mm	A50–34 A x B
Polycarbonate 5 mm	A50–35 A x B
Polycarbonate 6 mm	A50–36 A x B
Polycarbonate 8 mm	A50–38 A x B

Other plastic plates available on request

PVC foamed

Application
For enclosures or as shelves for light elements. Metal machining and cold or hot forming is possible. The plastic plates are placed directly in the extrusion slots or mounted using fixing elements such as brackets, Uniblocks or quick-release fasteners.

Specification
PVC foamed
scratch-proof and impact-resistant
oil-resistant
highly fire-retardant according to DIN 4102 (self-extinguishing)

Colour: white
Thickness: 3, 4, 6, 8 mm
Size: max. 2000 x 3000 mm
Weight: 3 mm: 2.1 kg/m²
4 mm: 2.8 kg/m²
6 mm: 4.2 kg/m²
8 mm: 5.6 kg/m²

Other colours may be supplied on request.

Order data	Order number
PVC foamed 3mm	A50–63 A x B
PVC foamed 4 mm	A50–64 A x B
PVC foamed 6 mm	A50–66 A x B
PVC foamed 8 mm	A50–68 A x B

Steel wire mesh

Application
Safety guards, store partitions, restricted access, etc.
This wire mesh can be inserted directly into the 8mm slot on the extrusion together with the surround extrusion C39–70 and the clamping extrusions B19–6 and A39–40.

Specification
Zinc-coated steel

Mesh width: 40 mm
Wire thickness: 4 mm
Size: max. 1000 x 2000 mm (1250 x 2500)
Weight: 4.5 kg/m²

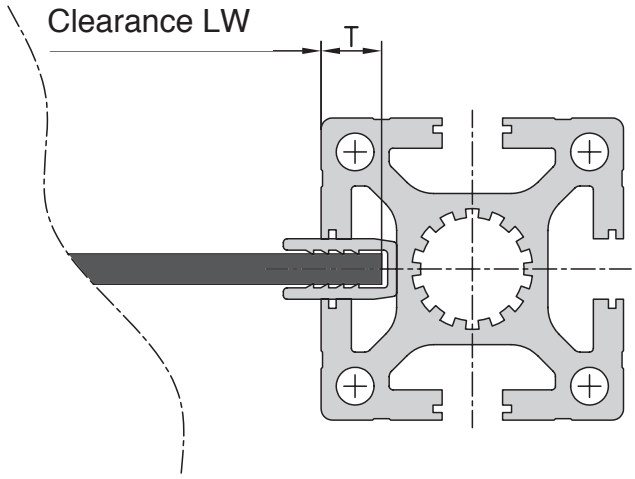

Mesurement data

	Base 30	Base 40	Base 45	Base 50
Mesh case depth T	5mm	8mm	10mm	12.5mm
mesh size A50–44	LW + 10mm	LW + 16mm	LW + 20mm	LW + 25mm
U-clamp extrusion length in a mitre cut	LW + 13mm	LW + 19mm	LW + 22mm	LW + 28mm

Order data	Order number
Steel wire mesh	A50–44 AxB

Suspended guard fittings

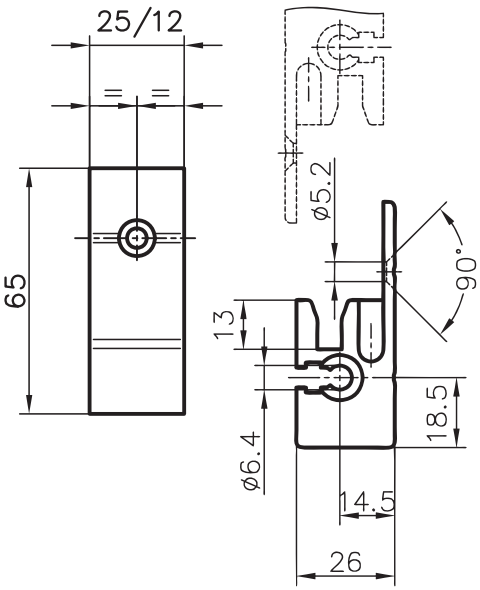

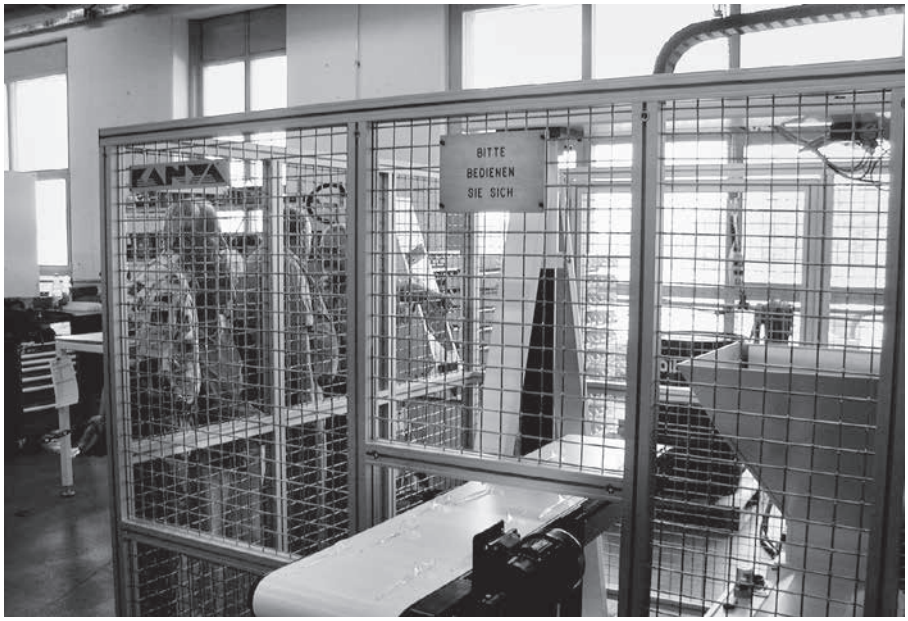

Application
For an easy suspension of elements. Extrusion frames with panel-elements can be placed between two extrusions.
The vertical and the horizontal suspend position hold the panels in the defined position.
The nuts are placed in the slot and with screws it can be fixed from both sides.

Parts supplied
2 Suspensions +
2 Screws with Screw-nuts

Specification
Al, anodised in natural colours

Order data		Order number
Suspension small	B=12 mm	B62–20
Suspension large	B=25 mm	B62–25

Plastic hinges fix

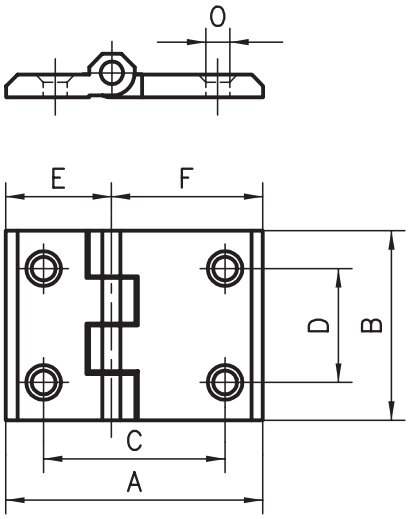

Plastic hinges lift-off type

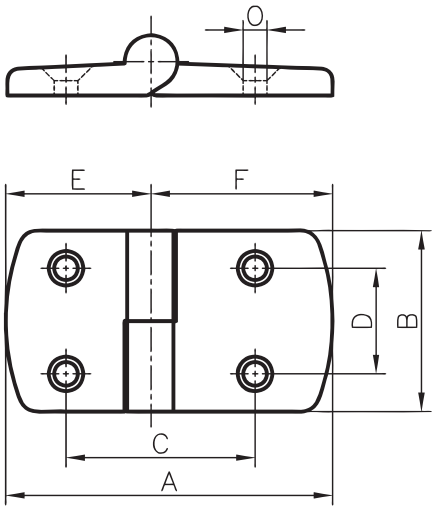

Aluminium hinges lift-off type

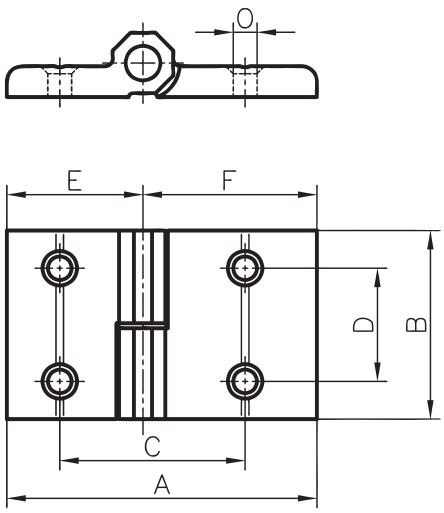

Application

That the optimal pivoting characteristics is given for doors, windows ect, the designer needs a selection of hinges, which are fitting exactly.

Whether cost efficient plastic, attractive diecasting, or high-strength Aluminium hinges, the assortment gives you the possibility to do the right choice.

Image: right fixed type

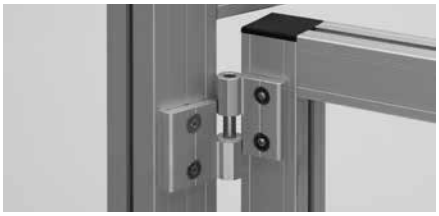

Image: left fixed type

Specification

PA-GF black
Pin: steel zinc coated

Specification

PA-GF black
Pin: steel zinc coated

Specification

Al anodised natural colours
Pin: steel zinc coated

Order data								Order number
Base	**A**	**B**	**C**	**D**	**E**	**F**	**O**	
50	76	50	56	30	38	38	6.3	A60–00–PA *
45	66	50	48	30	33	33	6.5	E60–00–PA *
50/30	63	50	43	30	25	38	6.3	AB6–00–PA *
30	50	50	30	30	25	25	6.3	B60–00–PA *

* Die Bestellnummer für den Befestigungssatz die jeweilige Artikelnummer mit –S ergänzen: Beispiel: A60–60–PA–S

Order data								Order number	
Plastic hinges									
Base	**A**	**B**	**C**	**D**	**E**	**F**	**O**	**left**	**right**
50	96	48	55	28	48	48	6.5	A60–60–PA*	A60–61–PA*
50/40	86	48	50	28	48	38	6.5	AC6–60–PA*	AC6–61–PA*
50/30	77	48	45	28	48	29	6.5	AB6–60–PA*	AB6–61–PA*
45	87	48	50	28	43.5	43.5	6.6	E60–60–PA*	E60–61–PA*
40	76	48	45	28	38	38	6.5	C60–60–PA*	C60–61–PA*
40/30	67	48	40	28	38	29	6.5	CB6–60–PA*	CB6–61–PA*
30	58	48	35	28	29	29	6.5	B60–60–PA*	B60–61–PA*
Aluminium hinges									
50	92	50	54	30	46	46	6.5	A60–60*	A60–61*
50/40	82	50	49	30	46	36	6.5	AC6–60*	–
50/40	82	50	49	30	36	46	6.5	–	AC6–61*
45	72	50	49	30	36	36	6.5	E60–60*	E60–61*
40	72	50	44	30	36	36	6.5	C60–60*	C60–61*

Zn-die cast hinges fixed type

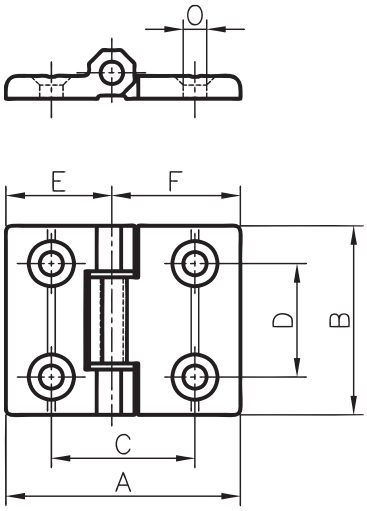

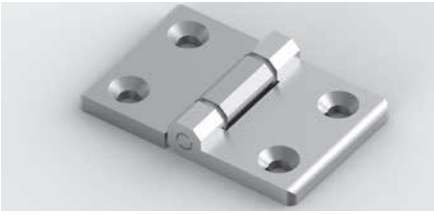

Specification
GD-Zn, nickel plated
(black powder coated on request)
Pin: steel zinc coated
washer: PA-6 white

Al-heavy duty hinges fixed type

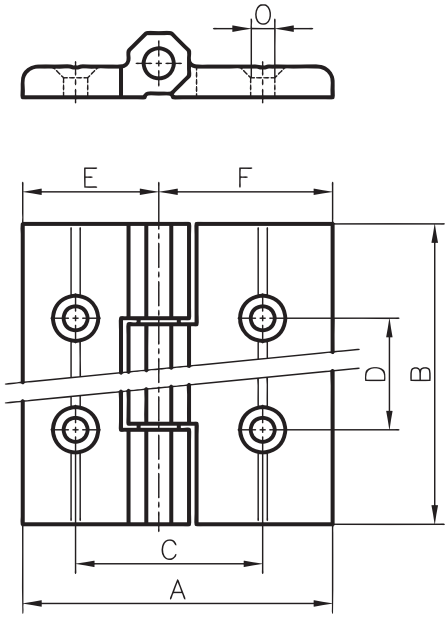

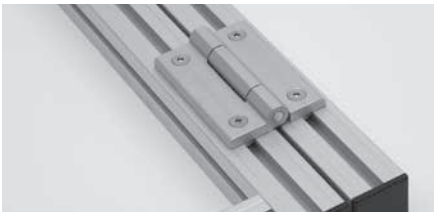

Specification
Al, anodised natural colours
Pin: steel zinc coated
bush bearing: iglidur G, grey

Order data								Order number
Zn-diecasting hinges								
Base	**A**	**B**	**C**	**D**	**E**	**F**	**O**	
50	78	50	54	30	39	39	6.3	A60–21*
50/40	73	50	49	30	34	39	6.3	AC6–21*/**
50/30	67	50	43	30	28	39	6.3	AB6–21*
40	68	50	44	30	34	34	6.3	C60–21*
40/30	62	50	38	30	28	34	6.3	CB6–21*
30	56	50	32	30	28	28	6.3	B60–21*
20	40	40	25	25	20	20	5.3	D60–21*
Al-heavy duty hinges								
Base	**A**	**B**	**C**	**D**	**E**	**F**	**O**	
50	92	100	54	75	46	46	6.3	A60–30*
50/40	82	100	49	75	36	46	6.3	AC6–30*
45	72	100	49	75	36	36	6.3	E60–30*
40	72	100	44	75	36	36	6.3	C60–30*

* the order number for the fixing kit add -S to the art.no.:
Example: A60–21–S

** also applicable for 45x45

Special hinges lift-off type

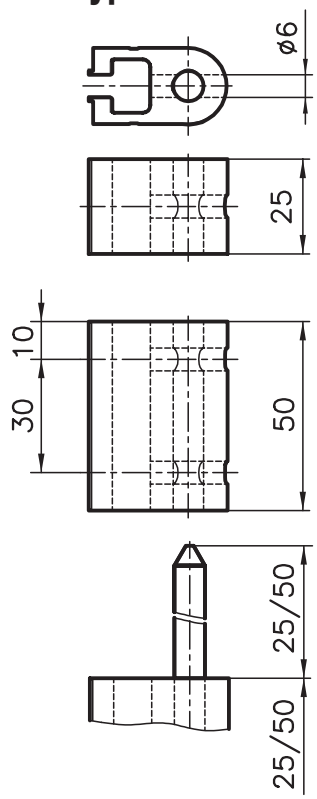

Specification
Al anodised natural colours
Pin Ø 8mm: steel zinc coated

Order data	Order number	
	L = 25	**L = 50**
Hinge component , no pin	A60–50	A60–55
Hinge component, with a pin	A60–51	A60–56

Plastic hinge
Base 20 fixed

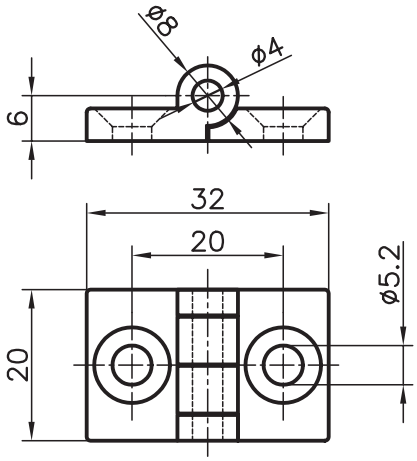

Application
For smart work structures which are set up on Base 20, these hinges are a compact solution. With an axial dimension of 20mm, there are no gaps between the extrusions.

Specification
PA-GF, black
Pin: zinc-coated steel

Fixing kit*
Screws and threaded plates

Order data	Order number
Base 20	D60–00–PA*

* Item number for fixing kit:
add –S to the order number
Example: A60–28–S

Aluminium flat hinge

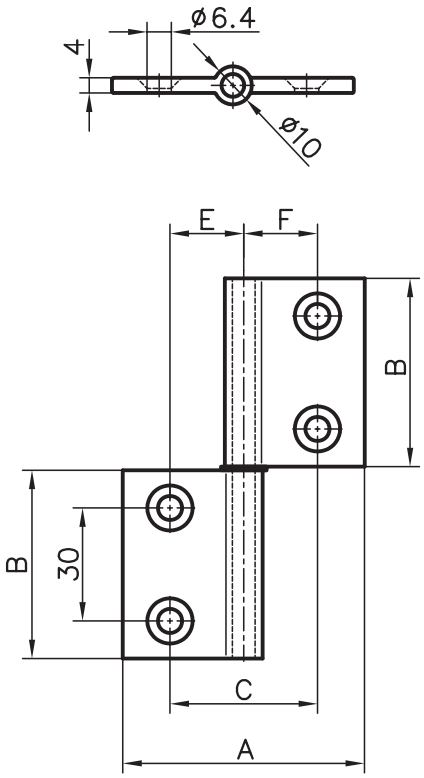

Application
The flat band hinges are mounted in a concealed position. When the doors are closed, only the hinge is visible. This provides an attractive design for swing doors. It also has the advantage that when the door is closed, the flat band hinge cannot be removed. This is important when considering the safety aspects.

Specification
Anodised aluminium
Pin: Stainless steel

Measurement data						Order number
Base	A	B	C	E	F	
50	84	50	60	30	30	A60–29*
45	84	50	55	27.5	27.5	E60–29*
40	84	50	50	25	25	C60–29*
30	64	50	40	20	20	B60–29*
50/45	84	50	57	29.5	27.5	AE6–29*
50/40	84	50	55	30	25	AC6–29*
45/40	84	50	52.5	27.5	25	EC6–29*
45/30	74	50	47.5	27.5	20	EB6–29*
40/30	74	50	45	25	20	CB6–29*
50/30	84	50	50	30	20	AB6–29*

Joint base 40/50

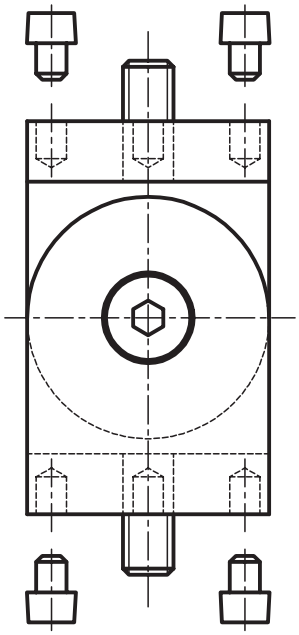

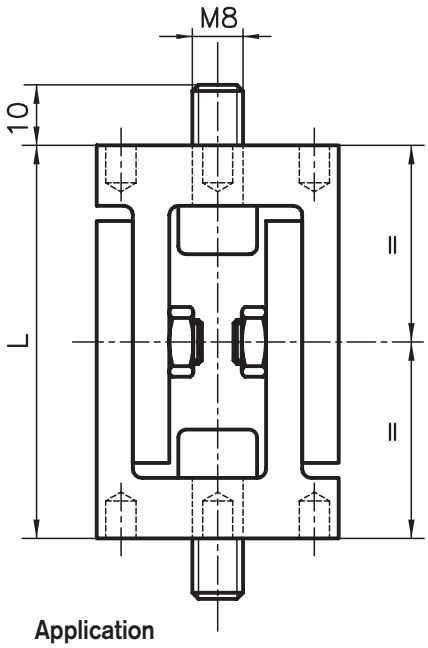

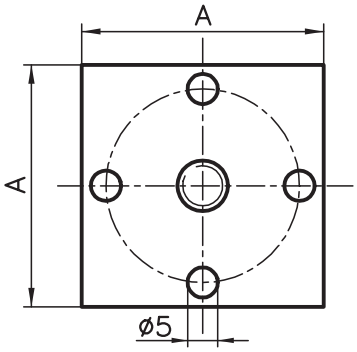

Application

Mainly used to strengthen structures with diagonal braces. It is also suitable to be used as a hinge for swivelling equipment stands, doors, etc. The (5 mm holes are designed to take dowels (which are included). Insert the dowels to give greatest stability.

Specification

Aluminium, matt, anodised in natural colours

Screws and flats: zinc-coated steel

Parts supplied

2 assembled joint halves
4 flats
1x fixation material
pursuant to situation 1 / 2 / 3

Assembly situation

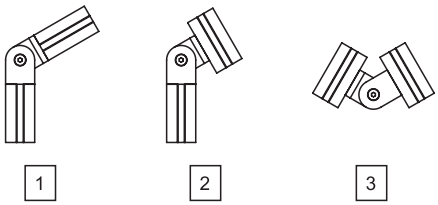

Fixation sets supplement product number with –S1, –S2 or –S3.

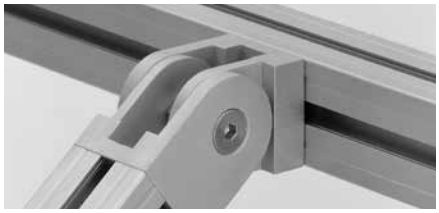

Order data			Order number
Joint	A	L	
Base 50	50	85	A61–00
Base 40	40	65	C61–00

Joints base 40/50 with clamp lever

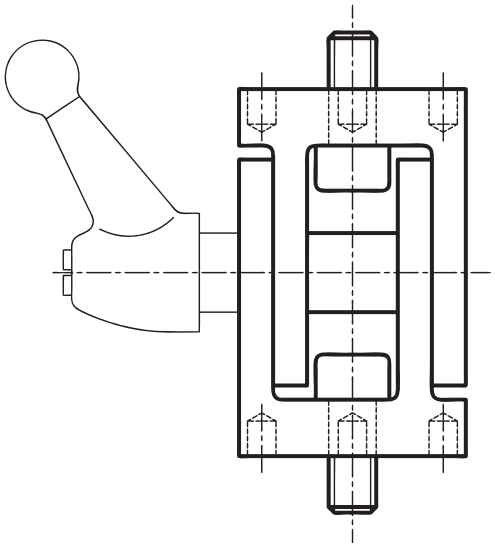

Specification

Aluminium, matt, anodised in natural colours

Screws and flats: steel zinc coated

Parts supplied

2 assembled joint halves
4 flats
1x fixation material
pursuant to situation 1 / 2 / 3

Order data			Order number
Joint with clamping lever	A	L	
Base 50	50	85	A61–01
Base 40	40	65	C61–01

Joint base 30
Type B61–00

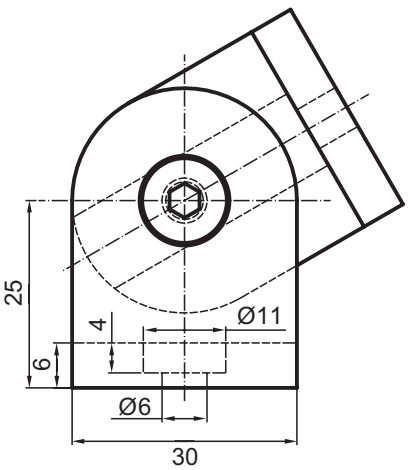

Application
The joints of the basis 30 are fundamentally used as connecting elements in which a connection crosswise to the groove can be generated. At the front, the joint is screwed with a thread insert. The connection laterally to a profile is done with a threaded plate and the matching screw. The variant without clamp lever is clamped when the screw is tightened. The joint is not designed for permanent movement.

Specification
Aluminium, matted, natural coloured anodised

Scope of supply
2 joint halves loose
1x fixation material
pursuant to situation 1 / 2 / 3
1 distance bushing
1 cyl. screw M6x30

Assembly situation

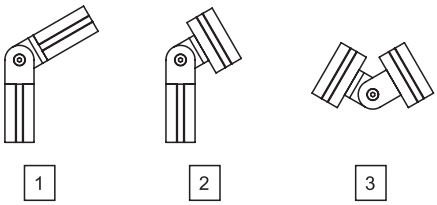

Fixation sets supplement product number with –S1, –S2 or –S3.
For example: B61–00–S1

Order data	Order number
Joint base 30	B61–00

Joint base 30 with clamplever
Type B61–01

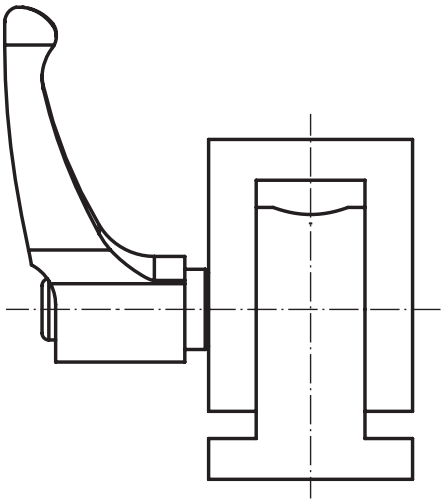

Application
The joint with clamp lever serves to create pivotable constructions easily. It is important here that the joint does not have to absorb strength against the course of the thread as it can otherwise become loose.

Specification
Aluminium, matted, natural coloured anodised

Scope of supply
2 joint halves loose
1x fixation material
pursuant to situation 1 / 2 / 3
1 clamp lever M6

Order data	Order number
Joint base 30 with clamplever	B61–01

Corner pieces

Attachment

All corner pieces can be mounted using three threaded connectors for the respective extrusion sizes. These can be found on page 146 or simply order a fixing kit. The order number of the fixing kit consists of the respective item number of the corner piece to which –S is added.

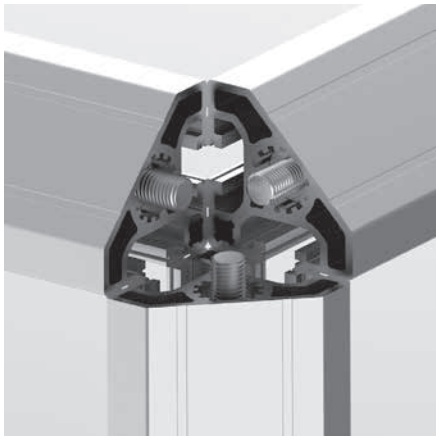

Corner piece fixing kit 3 threaded connectors

Application

Gives an attractive finish to the corners of display cases, work benches, office furniture, cabinets and other well designed structures. Available rounded or diagonally cut.

Fixing kit*

3 PVS connectors with thread

Specification

Aluminium, anodised in natural colours
Attached by a PVS threaded connector

Order data	Order number	
Corner piece	**round**	**flat**
Base 50 extrusions	A70–00*	A71–00*
A02–8 extrusion		A71–08*
Base 40 extrusions	C70–00*	C71–00*
C02–8 extrusion		C71–08*
Base 30 extrusions	B70–00*	B71–00*
Base 20 extrusions	D70–00*	D71–00*

* Fixing kit: add –S to the order number
Example: A70–00–S

Handles

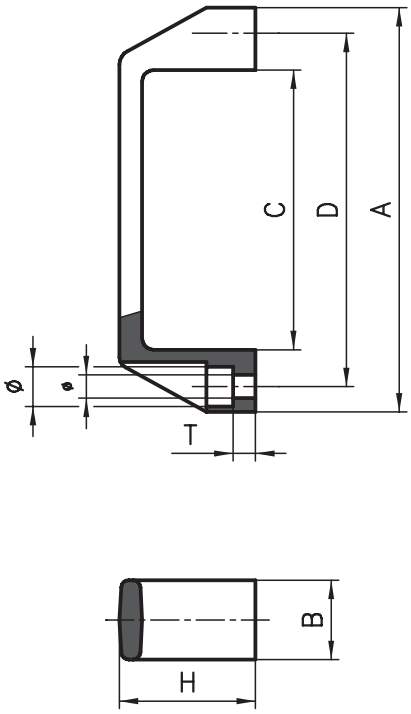

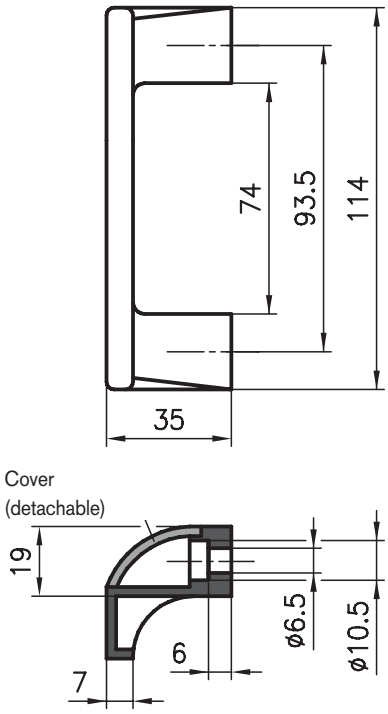

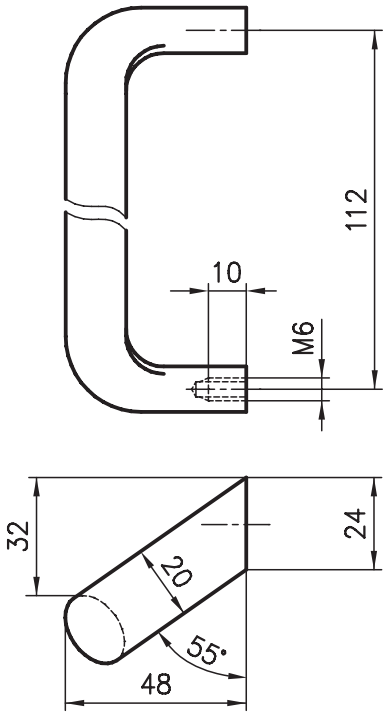

Application
Highly versatile. Two sizes are available from standard stock. Fixed in place from the inside or outside using M5/8 screws.

Specification
PA-GF, black

Measurement data

Handle	A	B	C	D	H	T	Ø	ø
small	107	21	74	93.5	36	6	10.5	6.5
medium	122	19	82	100	33	13	8.5	5.5
large	134	26	95	117	41	6.5	13.5	8.5

Application
A modern looking, ergonomic handle (mainly used on 20 and 30 base extrusions).

Specification
PA-GF, black

Application
For inset, sliding doors etc. This offset handle ensures no trapped fingers.

Specification
Black aluminium RAL 9005
(plastic coated)
Natural anodised aluminium

Order data	Order number
Small handle	B65–00
Medium handle	B65–01
Large handle	A65–01

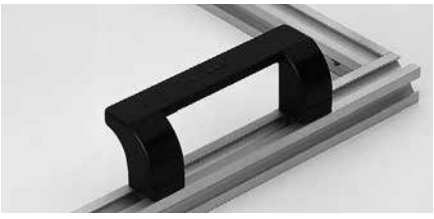

Order data	Order number
Ergo handle	D65–01

Order data	Order number	
Handle	black	anodised
	A65–05	A65–06

Tube handle offset

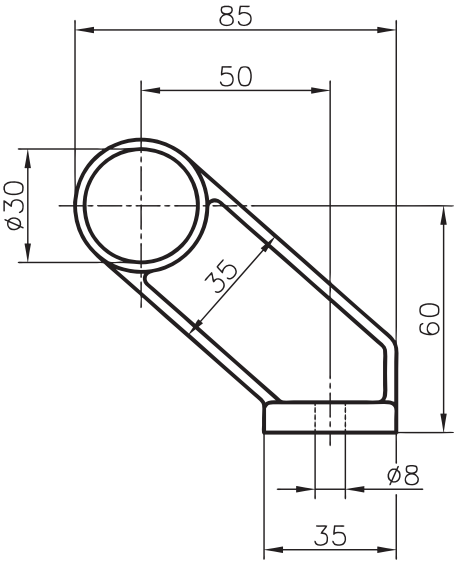

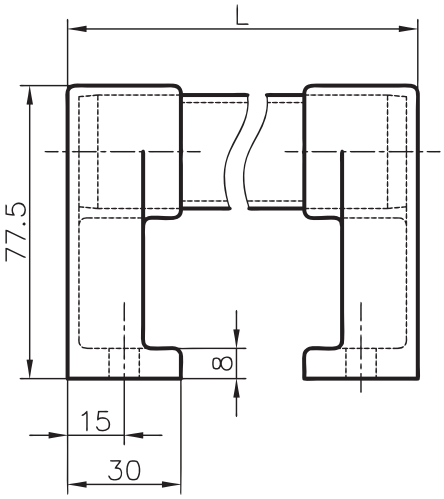

Application
These strong tubing grasps are suitable for heavy sliding doors, large windows or also as impact handles for trolleys.

With double sliding doors and critical space conditions, anywhere that risk of trapping hands exists, the offset tubing grasp is highly recommended.

Specification
Support: PA-GF, black
Tube: Al, anodised

Order data	Order number	
	L	
tube handle offset	250mm	A65–22
tube handle offset	300mm	A65–23
tube handle offset	400mm	A65–24
tube handle offset	500mm	A65–25

Other length on customers requirement available

Tube handle straight

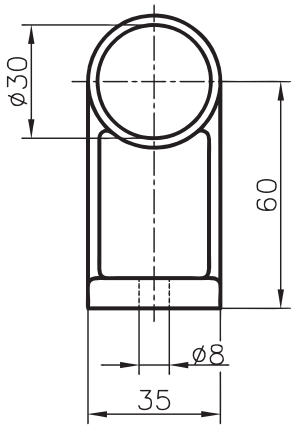

Specification
Support: PA-GF, black
Tube: Al, anodised

Order data	Order number	
	L	
Tube handle straight	250mm	A65–12
Tube handle straight	300mm	A65–13
Tube handle straight	400mm	A65–14
Tube handle straight	500mm	A65–15

Other length on customers requirement available

Grip recess
Type A65–50

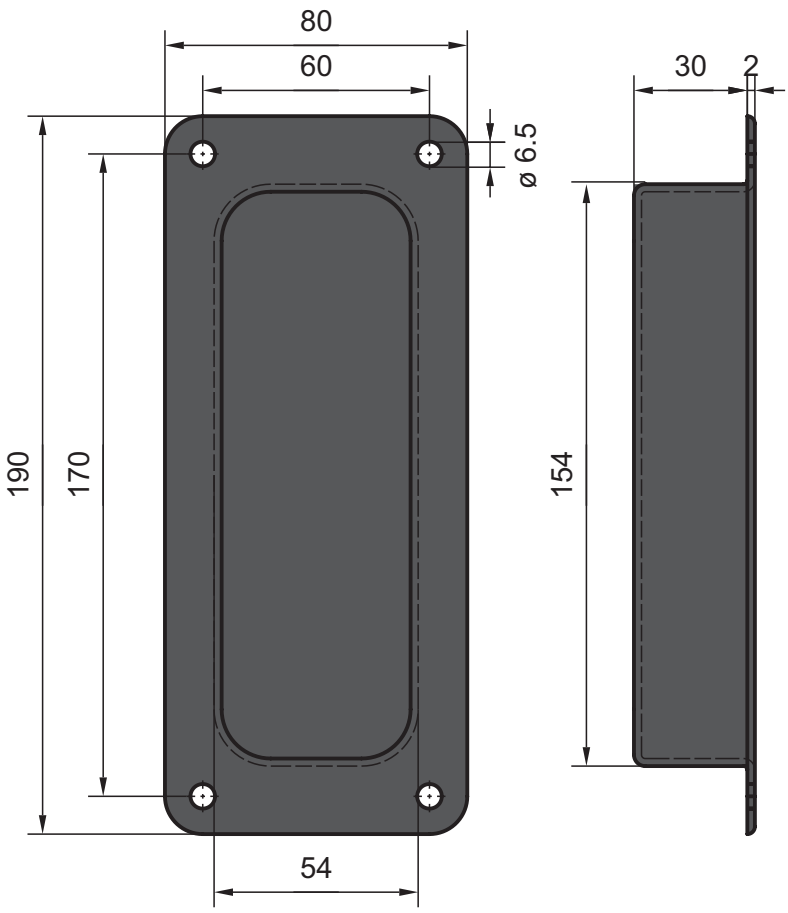

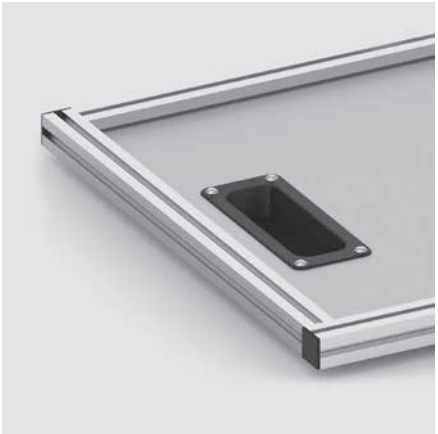

Application
A grip recess made of plastic that is sufficiently large for a hand wearing a glove to be inserted. Or you use this as a storage recess for small parts. Simple fixation by means of screws/rivets.

Specification
PA-GF black mat

Order data	Order number
Grip recess	A65–50

Ball catches

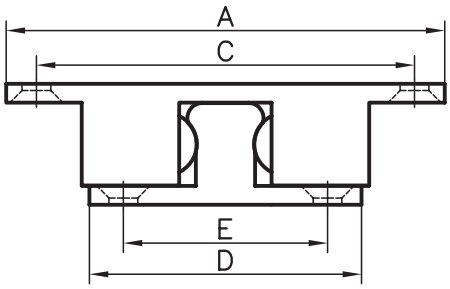

Measurement data

Size	A	B	C	D	E	H	ø
Small ball catch	59	10.5	50	38	27	16.4	3.6
Large ball catch	69	13	57	42	30	20	4.2

Application

The handle strip is used as drawer handle. It's also possible to use it for doors and windows

Specification

Brass (chromium-plate steel balls)
Clamping force adjustable

Order data	Order number
Small ball catch	A66–00
Large ball catch	A66–10

Ball catches

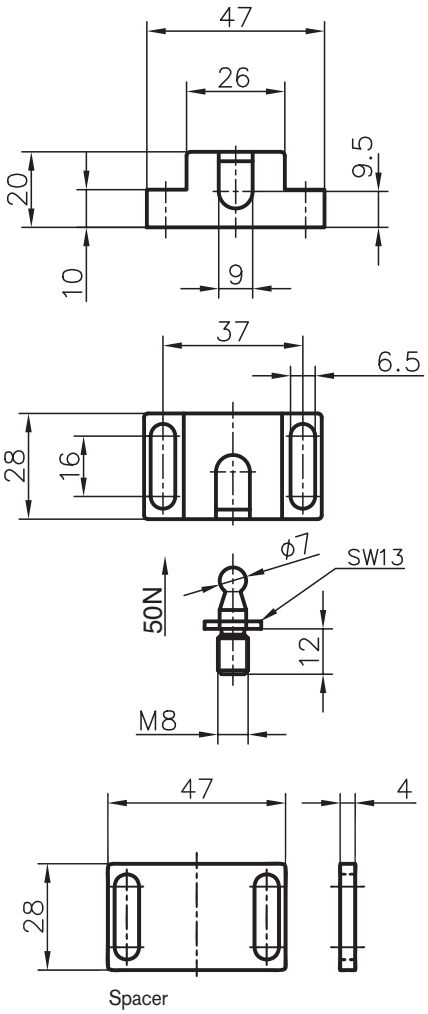

Specification

PA-GF, black
fixing screw: steel zinc coated

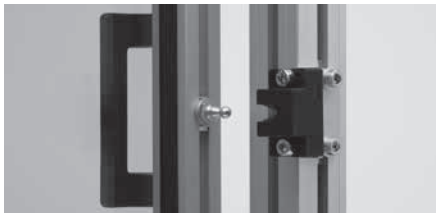

Order data	Order number
Ball catch	A66–50
Spacer	A66–54

Magnetic fasteners

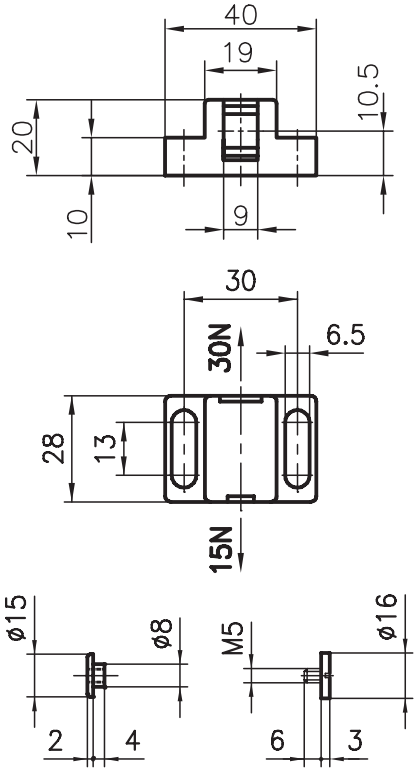

Application

This magnetic catch is highly adaptable. You can choose between two retention forces, depending on your requirements. The elongated holes also permit a large adjustment range.

Specification

Black plastic with a permanent magnet / pan-head screw with nut.

Order data	Order number
Duo magnetic catch	A67–20

Handle strip

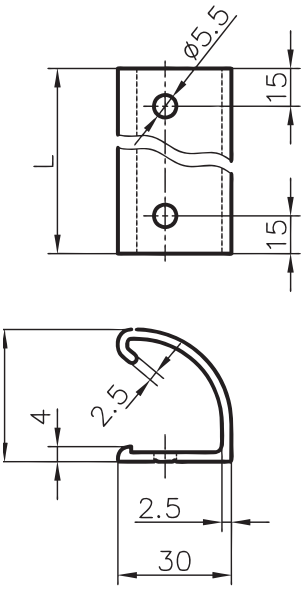

Application
The handle strip is used as drawer handle. It's also possible to use it for doors and windows

Specification
Al, anodised in natural colour

Order data		Order number
Handle strip	200 mm	B65–52
Handle strip	300 mm	B65–53
Handle strip	400 mm	B65–54

Other length on customer requirement available

Arrester plate

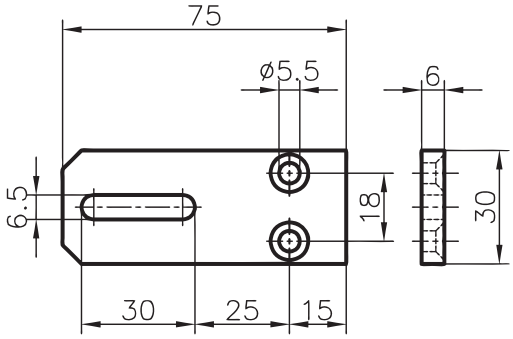

Application
As door- or window arresters with fixing possibility. It is possible to screw the arrester plate through the slot and make it secure. It's also qualified as a simple connecting element.

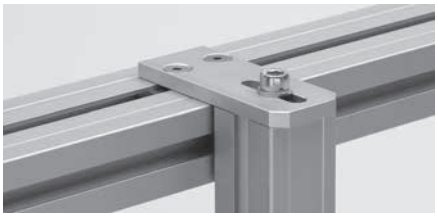

Specification
Al, anodised in natural colour

Order data	Order number
Arrester plate	C62–10 (–S)*

Quick-release fasteners

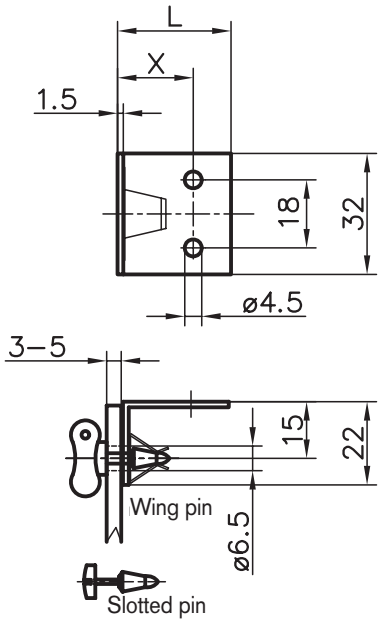

Application
For the quick fitting and removal of panelling. Simply press the wing or slotted pin in with your thumb; a quarter turn releases it.

Specification
Brackets and bolts: stainless steel
Spacer ring: rubber

Order data	Order number		
	L = 18	**L = 24**	**L = 30**
	X = 8.5	**X = 15**	**X = 18.5**
Quick-release fastener with a wing pin	A64–10	A64-12	A64–11
Quick-release fastener with a slotted pin	A64–20	A64-22	A64–21

Rod locks

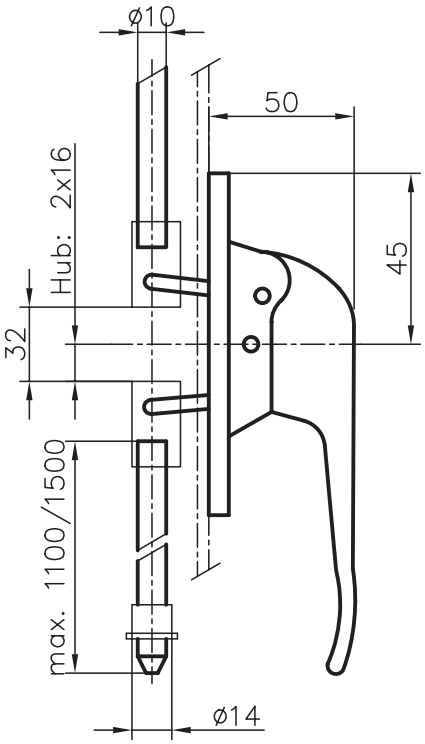

Application

The rod bolt is installed inside 50,40 and 30 mm base extrusions. The extrusions have to be milled in the area of the handle. It can have a single or double rod locking mechanism. The rod is cut to the appropriate installation length.

Specification

Handle:	Al, anodised in natural colours
Rod:	zinc-coated steel
max. length per rod:	base 50/40 max. 1500mm base 30 max. 1100mm

Fixing kit*

Screws and threaded plates, guide bushes

Order data			Order number
Rod lock Al lockable, 2 keys			
Base	**50**	**40**	**30**
1 rod	A68–14 (–S)*	C68–14 (–S)*	B68–14 (–S)*
2 rods	A68–15 (–S)*	C68–15 (–S)*	B68–15 (–S)*
Rod lock Al unlockable			
1 rod	A68–04 (–S)*	C68–04 (–S)*	B68–04 (–S)*
2 rods	A68–05 (–S)*	C68–05 (–S)*	B68–05 (–S)*

* Fixing kit: add –S to the order number
Example: A68–14–S

Inset lock

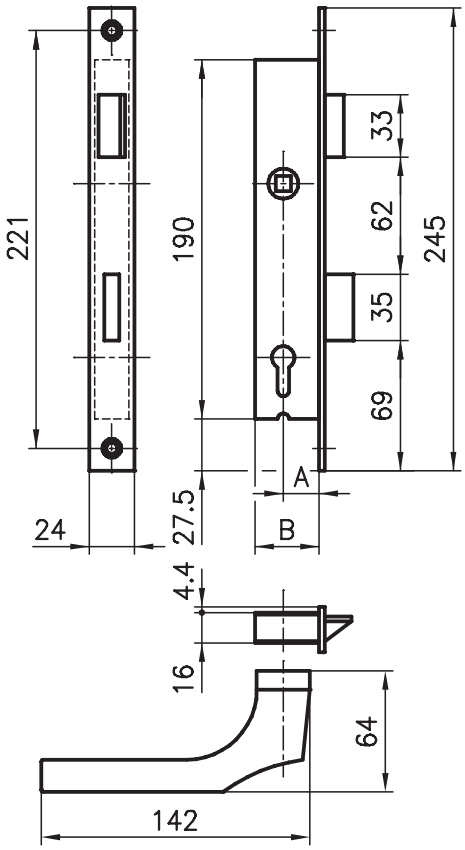

Application

Lockable and built into the extrusions Base 50, 40 and 30.The extrusion must be milled.

Specification and parts supplied

Lock:	zinc-coated steel
Cylinder:	Nickel plated brass
Key:	Nickel plated steel (3supplied)
Handle and escutcheon:	Al anodised

Fixing kit*

Screws and threaded plates

Order data			Order number
Inset lock	**A**	**B**	
Extrusion Base 50	27	42	A68–00*
Extrusion Base 40	19	34	C68–00*
Extrusion Base 30	15	30	B68–00*

* Fixing kit: add –S to the order number
Example: A68–00–S

Snap-lock

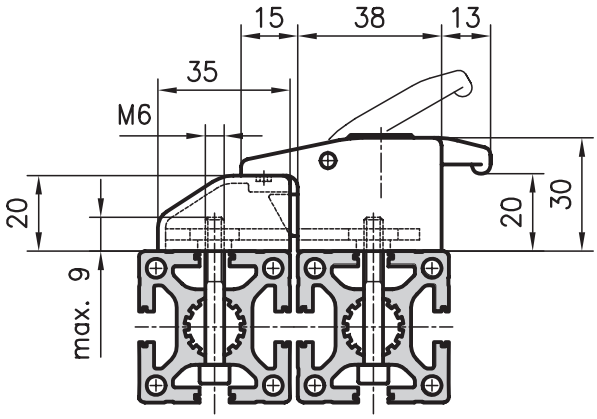

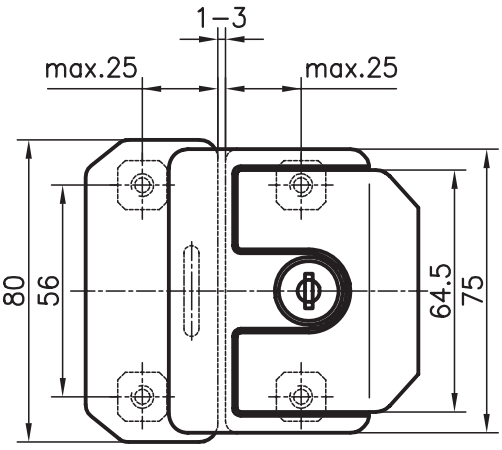

Application
The snap-lock comprises a door housing with a latch as well as a framework housing. Its versatile design allows the lock to be used for different widths of extrusion. Another advantage is that it is very easy to open and close.

Specification
GD-Zn, black
instant locking, 2 keys
Four M6 square nuts

Order data	Order number
Snap-lock	A68–50

Safety switches

Application
Safety switches are mandatory in many applications. If required by the customer, we will provide and set up the mechanical assembly. Simply send us the switch and we will integrate it in the structure.

Due to the wide range and individual customer requirements, we have decided not do illustrate a specific product in our catalogue. We are also happy to suggest a suitable safety switch for you.

Depending on the potential risk, the switches must fulfill various functions, e.g.:
- electroless mechanical locking
- signal when door closed
- enabling/disabling of automatic processes

Sealing plates

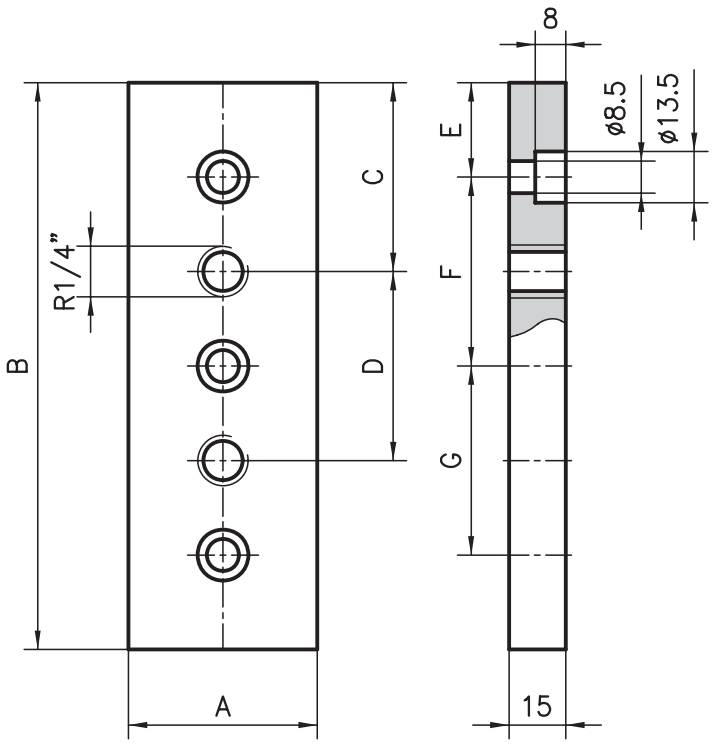

Flat sealing element

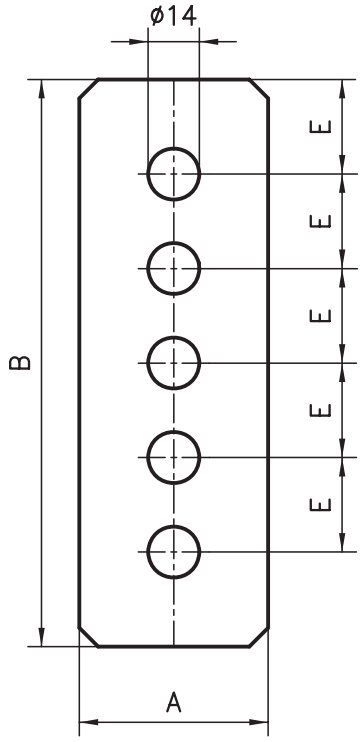

Application
To seal the cut ends of manifold extrusions. Air, water, oil or other media can be supplied or drained off with the appropriate gas fittings.

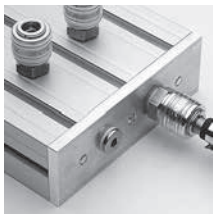

Fixing kit*
Screws + threaded inserts

Specification
Al, anodised in natural colours
1/4" gas connection

Order data								Order number
Sealing plate	**A**	**B**	**C**	**D**	**E**	**F**	**G**	
40x80 extrusion	40	80	40	–	20	40	–	C80–30*
50x100 extrusion	50	100	50	–	25	50	–	A80–10*
50x150 extrusion	50	150	50	50	25	50	50	A80–30*

* Fixing kit: add –S to the order number
Example: C80–30–S

Order data	Order number
Flat sealing element for the sealing plate	
40x80 extrusion	C80–31
50x100 extrusion	A80–11
50x150 extrusion	A80–31

Sealing washer

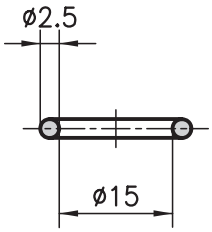

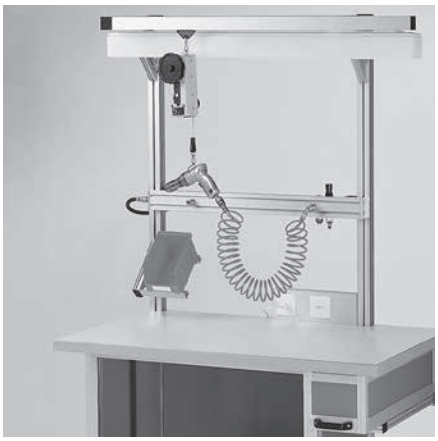

Application
The flat seal between the sealing plate and the extrusion end or a sealing washer between the junction plates and the side of the extrusion guarantees a seal up to 6 bar.

Specification
Black nitrile rubber
70 shore A

Junction plates

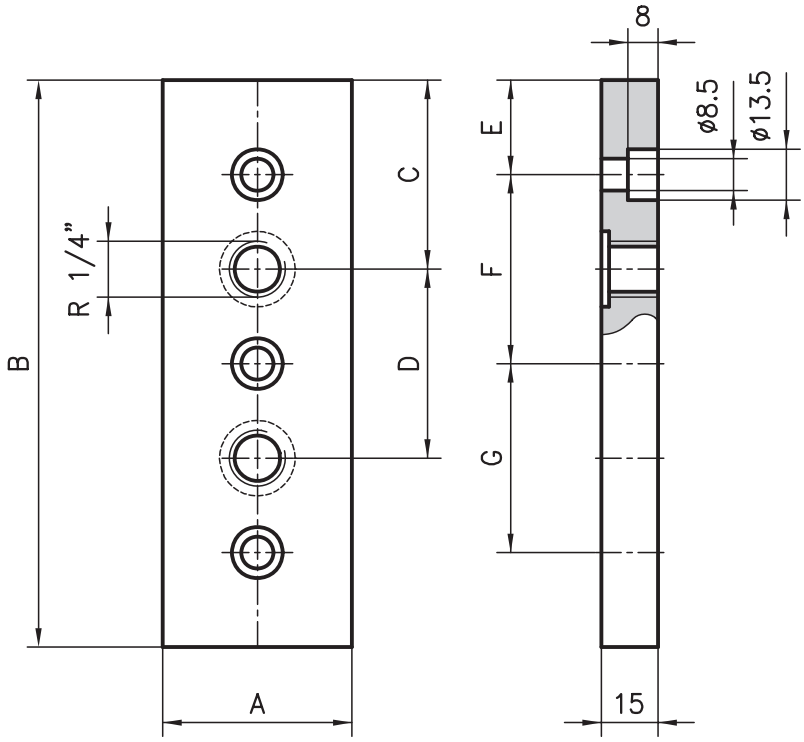

Application
High pressure junction plate for side Connections up to 6 bar. The thread for the junction is normally tapped directly into the side of the extrusion. No junction plates are required for side connections to the 40x80 extrusion.

Fixing kit*
Screws + threaded plates

Specification
Al, anodised in natural colours
1/4" gas connection

Order data	Order number
Junction plate sealing washer	
50x100 extrusion	A80–41
50x150 extrusion (2 x)	A80–42

Order data								Order number
Junction plate	**A**	**B**	**C**	**D**	**E**	**F**	**G**	
50x100 extrusion	50	100	50	–	25	50	–	A80–40*
50x150 extrusion	50	150	50	50	25	50	50	A80–50*

* Fixing kit: add –S to the order number
Example: C80–40–S

Shaft clamping block

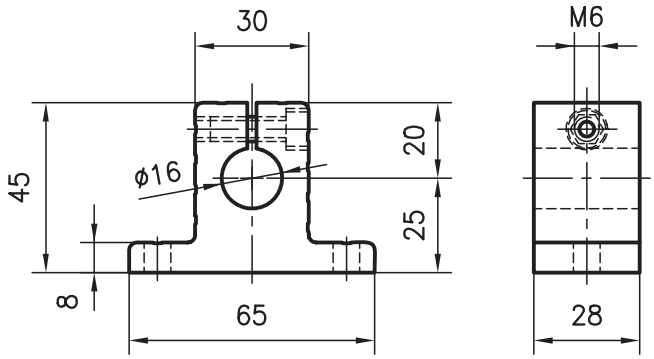

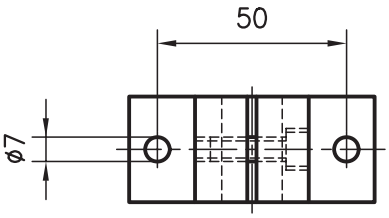

Shaft clamping block – straight

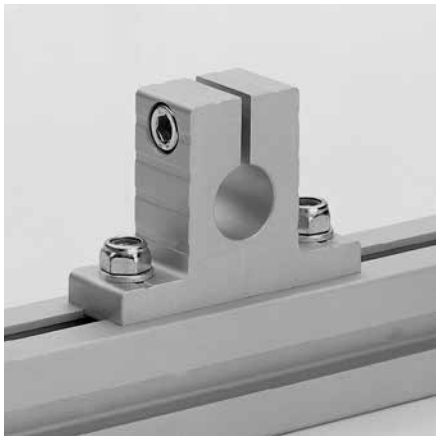

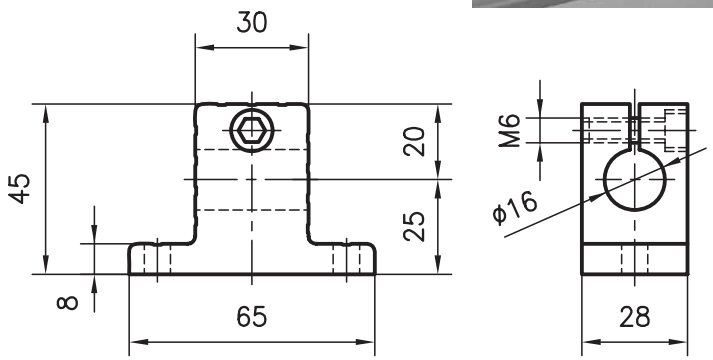

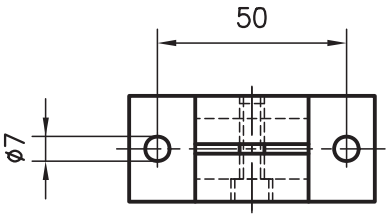

Shaft clamping block – 90°

Application

A high-precision linear bearing system can be created very easily with the components, i.e. the shaft clamping block, the linear bearing block and the steel shaft. As there are two different shaft clamping blocks, the system can be assembled flexibly. The fixing centres combine well with the PVS extrusions.

Specification

Aluminium, anodised in natural colours

Order data	Order number
Shaft clamping block – straight	L16–60
Shaft clamping block – 90°	L16–65

Linear sliding block

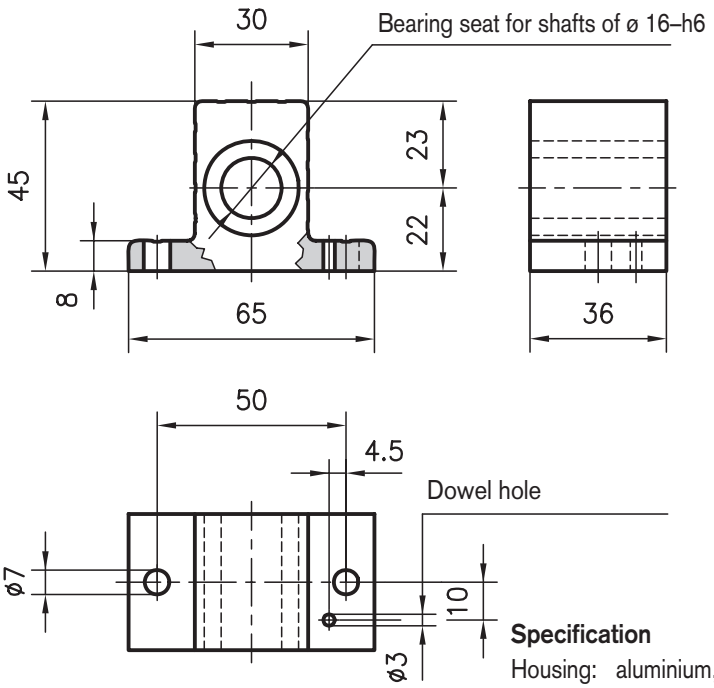

Specification
Housing: aluminium, anodised in natural colours
Linear bearing: steel, sealed on both sides, maintenance-free

Steel shafts

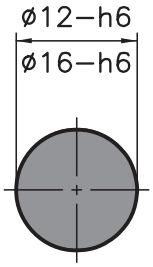

Application
The steel shafts are used in combination with the linear sliding block and the shaft clamping blocks assembled on the appropriate extrusion framework. This serves to create high load-bearing linear guides.

Specification
Steel, Cf 53, hardened, ground
Hardness: HRc 62 ± 2
Ø 12 0.9 Kg/m
Ø 16 1.5 Kg/m

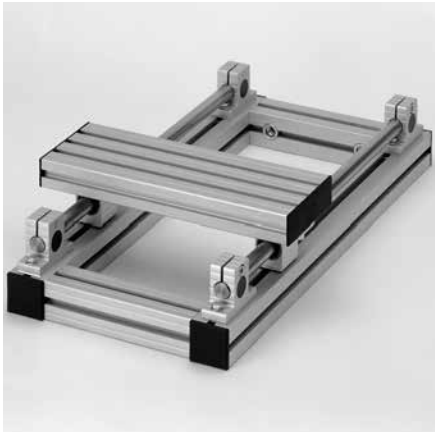

Load rating	
dynamic	**static**
850 N	620 N

Order data	Order number
Linear sliding block	L16–68

Order data	Order number
Steel shaft ø12	
Standard length 6000 mm	L12–20–01/6000
Cut to length	L12–20–02–02/…
Steel shaft ø16	
Standard length 6000 mm	L16–20–01/6000
Cut to length	L16–20–02–02/…

Shaft clamping extrusions

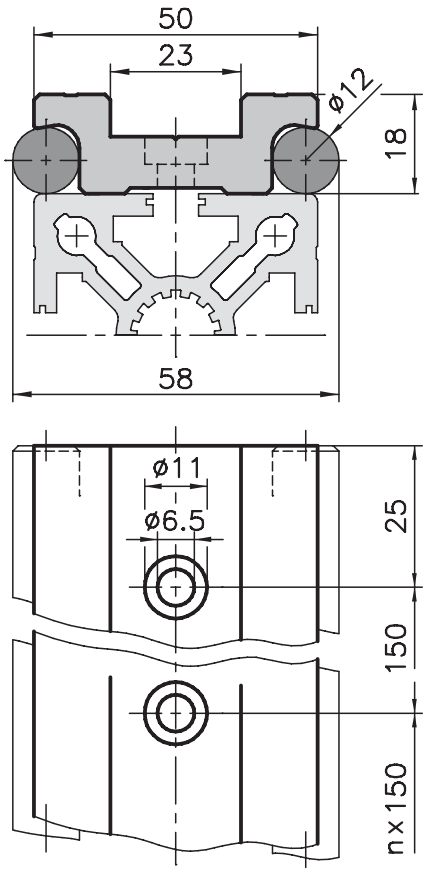

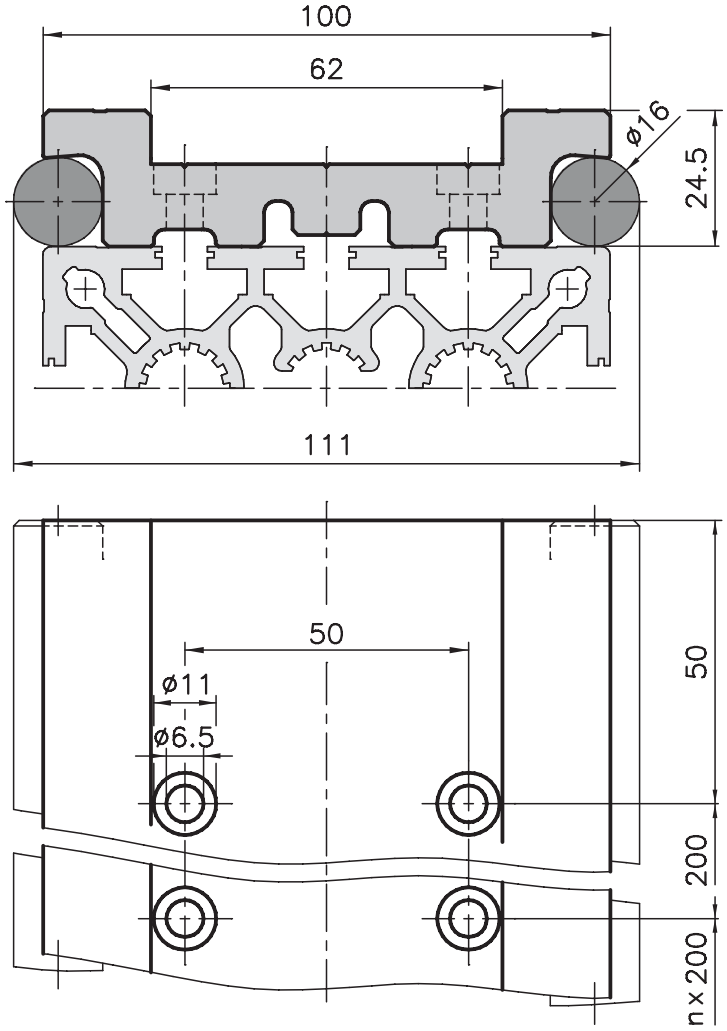

Application

The steel shafts are fixed firmly to the Base 50/100 extrusion using the shaft clamping extrusion. They can be combined with the slide plates and rollers as a simple way to create linear slides to move very high loads.

Specification

Aluminium, matt, anodised in natural colours
Pre-drilled mounting holes

Order data	Order number
Shaft clamping extrusion	**50 mm base**
Standard length 6000 mm	L12–05–00/6000
Cut to length	L12–05–02–02/…
Shaft clamping extrusion	**100 mm base**
Standard length 6000 mm	L16–05–00/6000
Cut to length	L16–05–02–02/…

Application

Shaft clamping extrusion complete with steel shafts Cf 53, hardened, ground and with fixing kit.

Order data	Order number
Steel clamping extr., compl.	**50 mm base**
Standard length 6000 mm	L12–06–00/6000
Cut to length	L12–06–02–02/...
Steel clamping extr., compl.	**100 mm base**
Standard length 6000 mm	L16–06–00/6000
Cut to length	L16–06–02–02/...

Shaft clamping extrusions 2-part Ø16

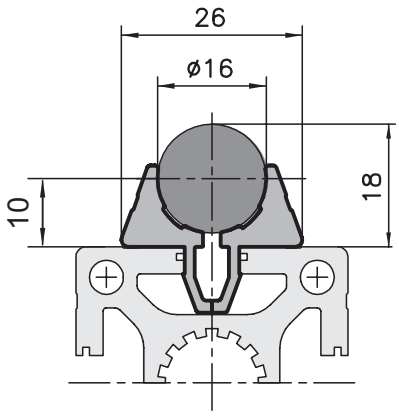

Shaft clamping extrusions Ø12, Type L12–01

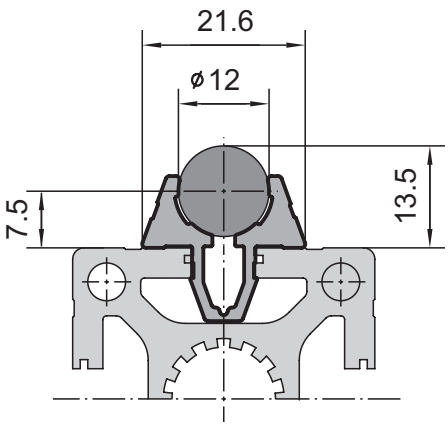

Application
For simple linear guides. The two-part shaft clamping extrusion is used to clip steel shafts Ø16 into all slots of 40 and 50 base extrusions. The beam extrusion can be freely selected depending on the strength requirements. Measure L determines the rollers illustrated on page 216 which are also required.

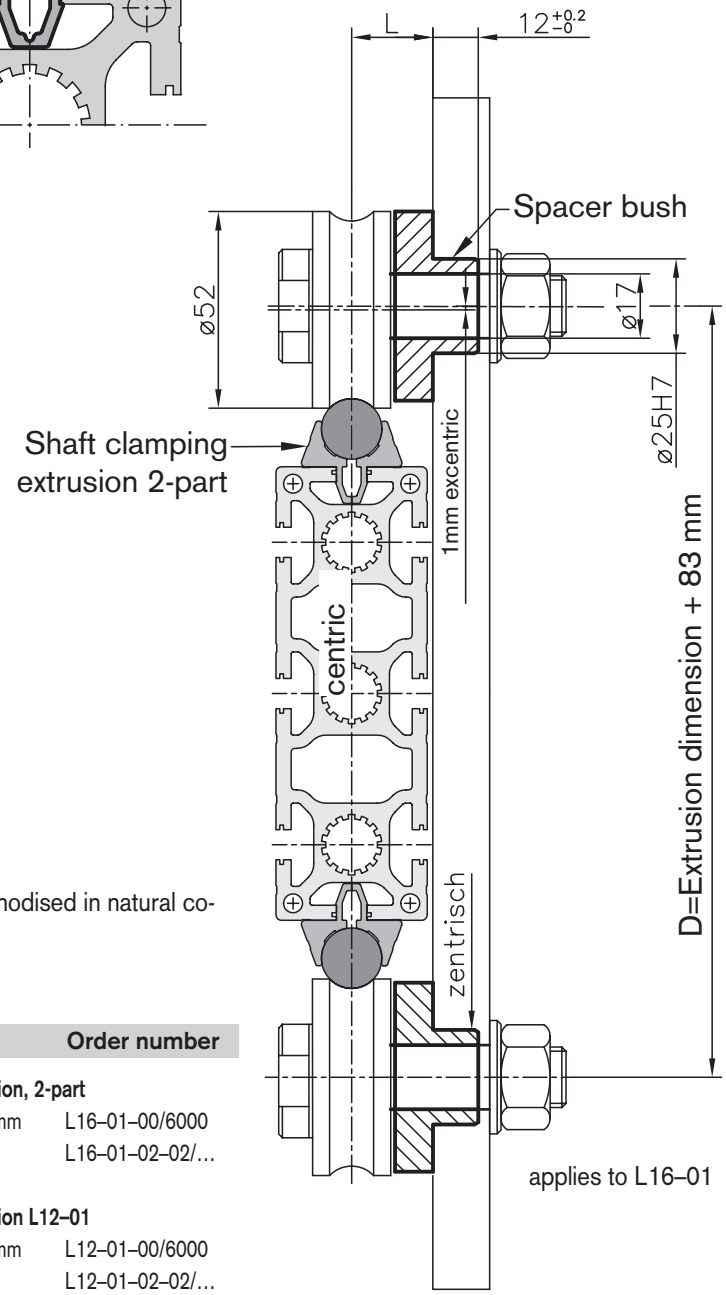

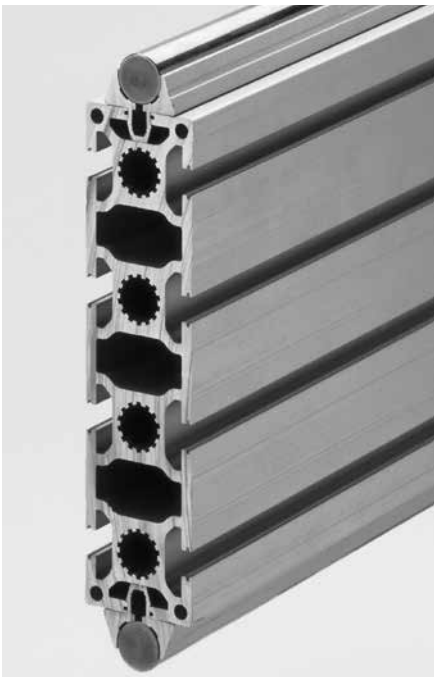

Specification
Aluminium, matt, anodised in natural colours

Order data	Order number
Shaft clamping extrusion, 2-part	
Standard length 6000 mm	L16–01–00/6000
Cut to length	L16–01–02–02/…
Shaft clamping extrusion L12–01	
Standard length 6000 mm	L12–01–00/6000
Cut to length	L12–01–02–02/…

Shaft support extrusion 40x100 type L16–10

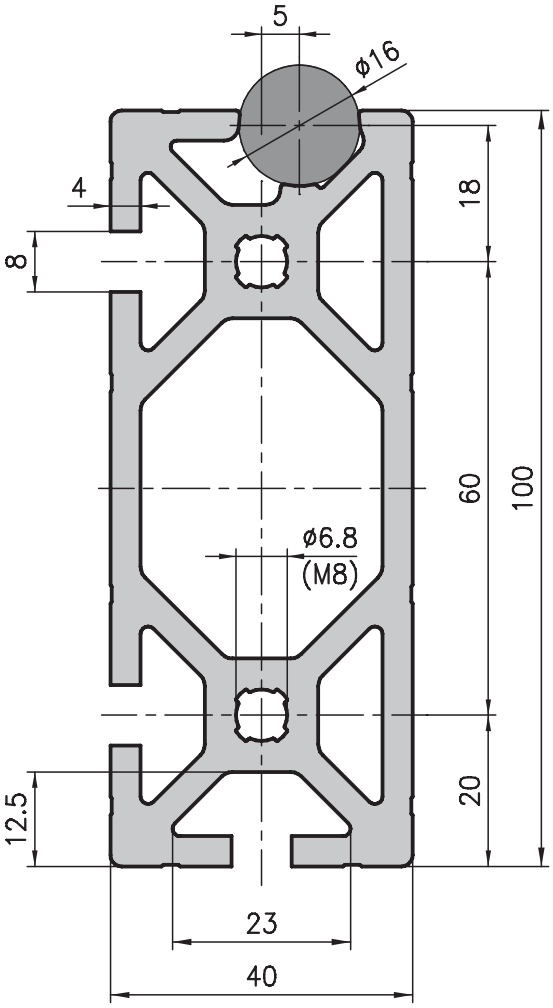

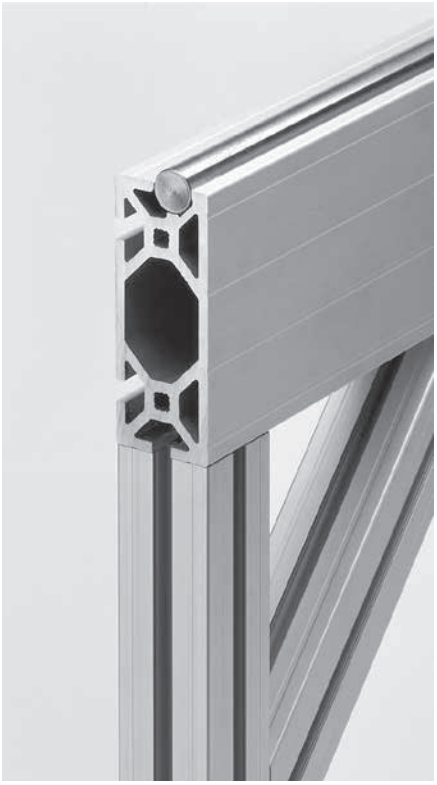

Anwengung

The guide extrusion 40x100 is used for high load linear slides. Because of the steel shaft support on one side, the distance between the guides can be freely selected. The shaft is pressed into the designated slot.

A stop can be attached to the front face in the holes Ø 6.8 with a M8 thread.

Technical data	
Ix	= 172.22 cm^4
Iy	= 31.92 cm^4
Wx	= 33.83 cm^3
Wy	= 15.95 cm^3
Cross-section area	= 16.75 cm^2
Weight	= 4.5 kg/m

Order data	Order number
Shaft support extrusion 40x100	
Standard length 6100 mm	L16–10–00/6100
Shaft support extrusion 40x100	
Cut to length	L16–10–02–02/…
Extra machining	Pages 57–61

Shaft support extrusion type L12–10

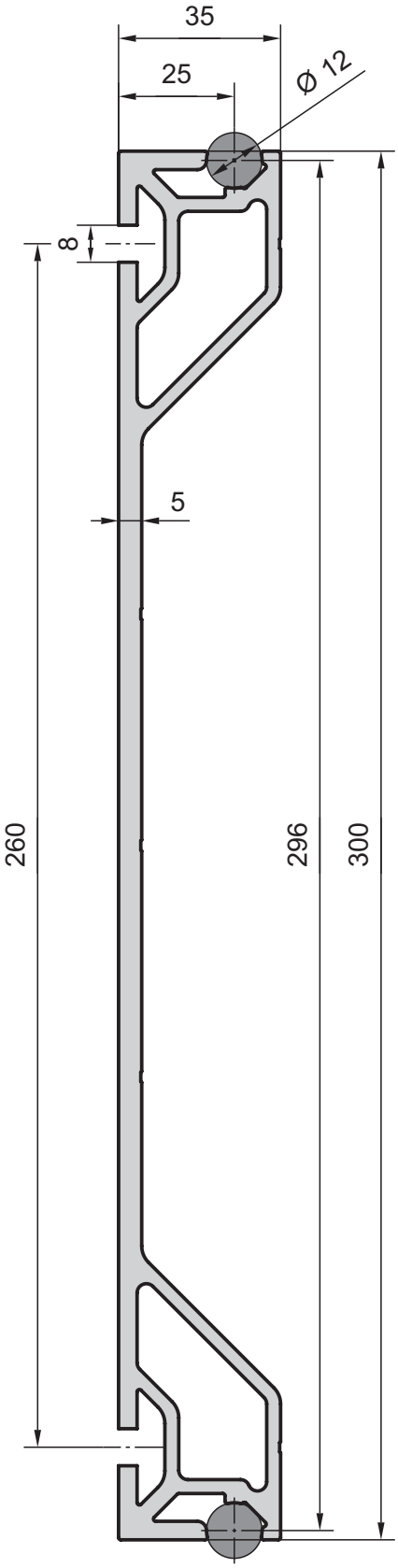

Application

This guide profile with great distance between the shafts results in a very stable and low-cost central guideway. The steel shafts are only pressed into the groove. With the matching rollers, high loads can be shifted horizontally. The thickness of 5mm in the connecting bridge and the two grooves permit optimum connection to a basic structure.

Technical data		
Ix	=	1683.00 cm^4
Iy	=	48.00 cm^4
Wx	=	112.00 cm^3
Wy	=	27.40 cm^3
Cross-section area	=	22.80 cm^2
Weight	=	6.25 kg/m

Order data	Order number
Shaft support extrusion L12–10	
Standard length 6100 mm	L12–10–00/5800
Shaft support extrusion L12–10	
Cut to length	L12–10–02–02/…

Slide plates

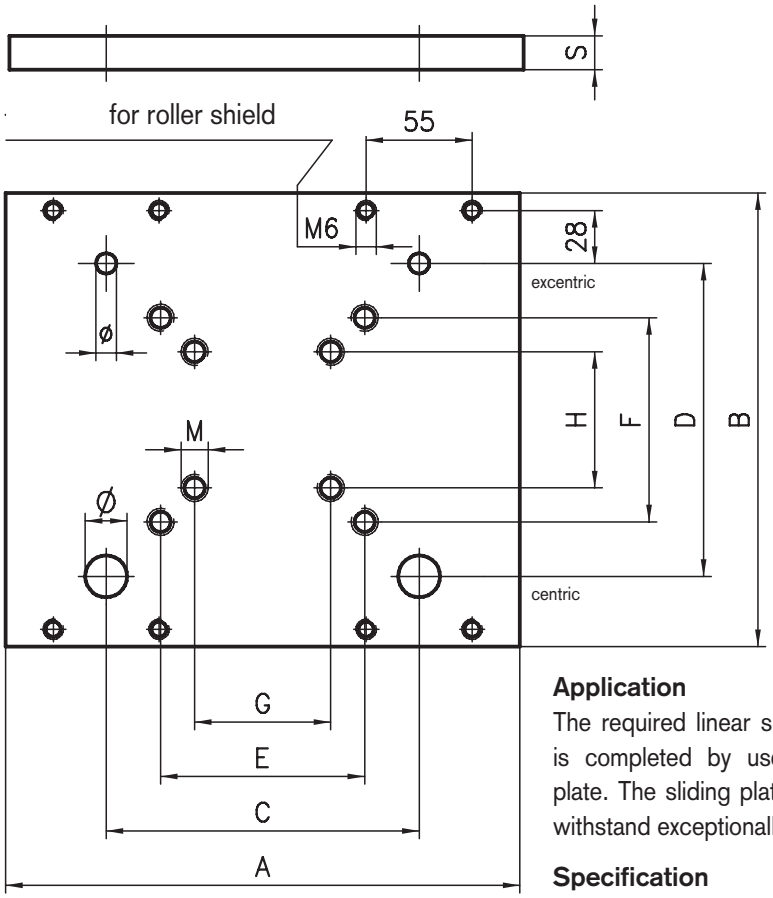

Slide plates acc. to customer drawing

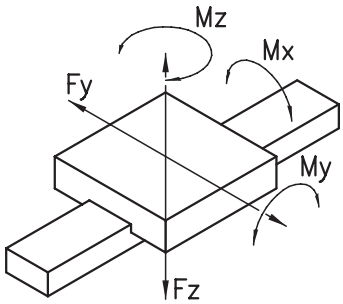

Application

The required linear slide arrangement is completed by use of the sliding plate. The sliding plate is designed to withstand exceptionally heavy loading.

Specification

Raw aluminium

Measurement data

Slide plate for use with shaft clamping extrusion

Base	A	B	C	D	E	F	G	H	M	s	Ø	ø	Weight
50	150	130	110	89	60	60	30	30	8	12	12	10	0.6 kg
100	300	240	200	158	100	100	50	50	8	15	20	17	2.9 kg

Slide plate for use with two part shaft clamping extrusion

Ectrusion	A	B	C	D	E	F	G	H	M	s	Ø	ø	Weight
50x150	350	310	250	233	150	150	75	75	8	15	*	17	4.3 kg
40x160	350	320	250	243	150	150	75	75	8	15	*	17	4.5 kg

Loading and moments

	static [N/Nm]					dynamic [N/Nm]				
	F_y	F_z	M_x	M_y	M_z	F_y	F_z	M_x	M_y	M_z
50	3000	1920	35	55	90	3000	1200	22	34	90
100	7200	3400	105	160	600	7200	2100	65	100	600
50x150	7200	2500	130	190	800	7200	1500	90	120	800
40x160	7200	2500	135	195	850	7200	1500	90	120	850

Order data	Order number
Slide plate for use with shaft clamping extrusion	
Base 50	L12–30
Base 100	L16–31
Slide plate for use with two part shaft clamping extrusion	
50x150 extrusion	L16–35
40x160 extrusion	L16–34
acc. to customer's drawing	L12–39
acc. to customer's drawing	L16–39

* counter bore for distance bush, see on page 212

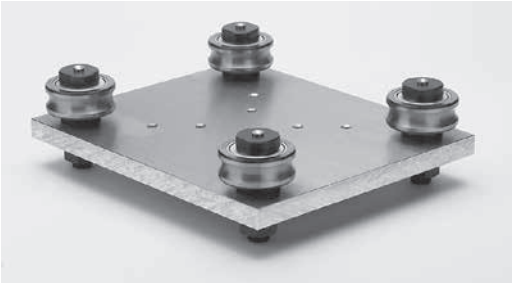

Rollers

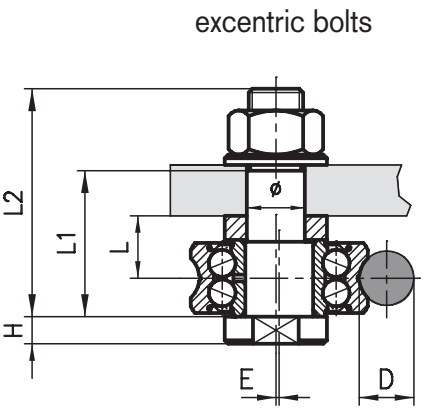

Model L16-26

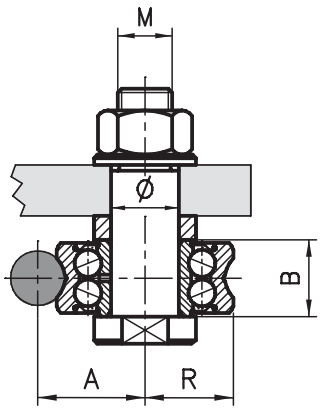

L16–25

Application
For use with the slide plates, to do a lineaer guide-rail.

Specification
Roller: steel 100 Cr6, hardened, grinded nut and ground bolt and spacer bush: black steel

Measurement data												Load rating	
D	**A**	**B**	**E**	**H**	**L1**	**L2**	**M**	**R**	**Ø**	**ø**	**Weight**	**dyn.**	**stat.**
ø12	21.75	15.9	0.75	5	29	45	M10x1.5	17.5	12H7	10	0.15 kg	8400 N	5000 N
ø16	31.5	22.6	1.0	8	44	67	M16x1.5	26	20H7	17	0.42 kg	16800 N	9500 N

* Counter sunk drilling

Order data	Order number	
Roller for bar Ø12	**centric**	**eccentric**
L = 14	L12–25	L12–26
Roller for base 40	L12–21	L12–22
Roller for base 50	L12–27	L12–28
Roller for bar Ø16		
L= 18.5 to shaft clamping extrusion	L16–25	L16–26
L= 21.5 to shaft clamping extrusion two-part base 40	L16–21	L16–22
L= 26.5 to shaft clamping extrusion two-part base 50	L16–27	L16–28

Roller cover cpl.
Type L12–45

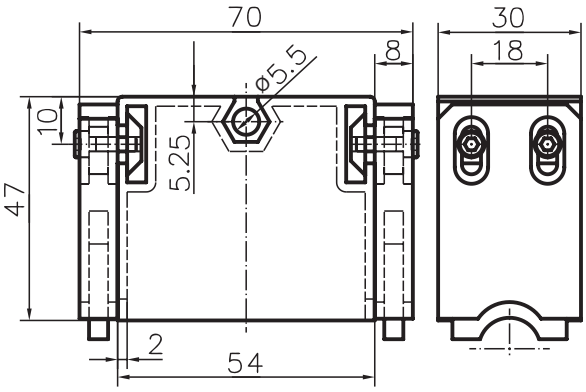

Roller cover cpl.
Type L16–45

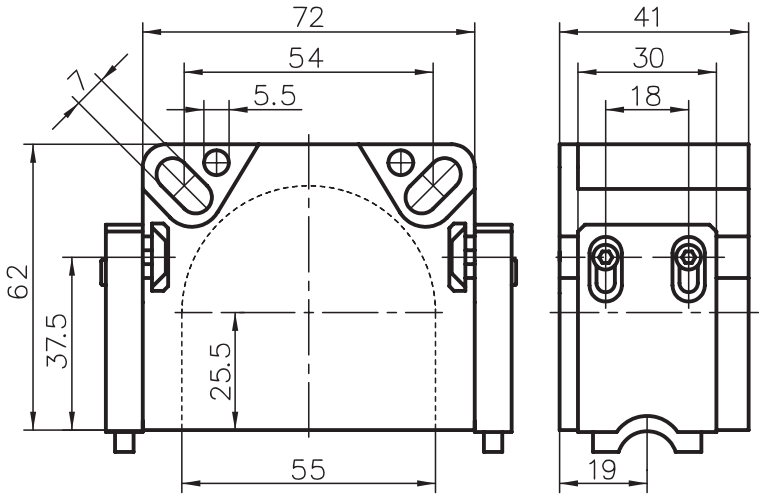

Application
This cover offers protection against dust and other contamination. The lateral grooves are envisaged to affix the oil strippers.

Specification
PA-GF, black

Scope of supply
1 roller cover
2 grease scraper
4 cyl. screws
4 threaded plates

Weight: ca. 0.05 kg

Order data	Order number
Roller cover cpl.	L12–45

Order data	Order number
Roller cover cpl.	L16–45

Grease scraper

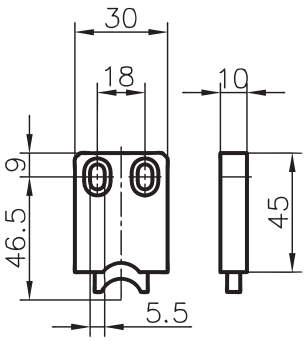

Application
The grease scraper is for two functions. On one hand, it cleans the steel bars and on the other it coat the steel bars with a grease film to protect it from rusting.

Specification
Shield: PA-GF
grease scraper: grease-impregnated felt

Order data	Order number
Grease scraper Ø 16	L16–46
Grease scraper Ø 12	L12–46

Spacer for the roller shield

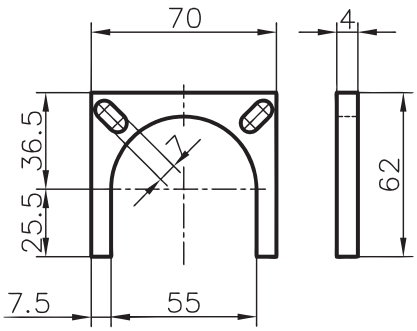

Application
As a spacer for the roller shield to adjust the different sizes of the rollers.

Specification
Aluminium, raw
1 pc for roller L=21.5
2 pc for roller L=26.5

Order data	Order number
Spacer	L16–40–04

Grease scraper support

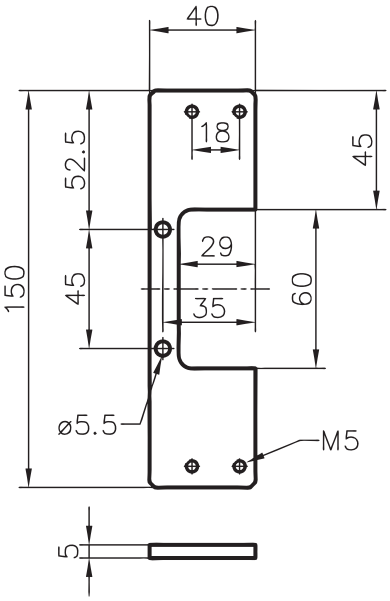

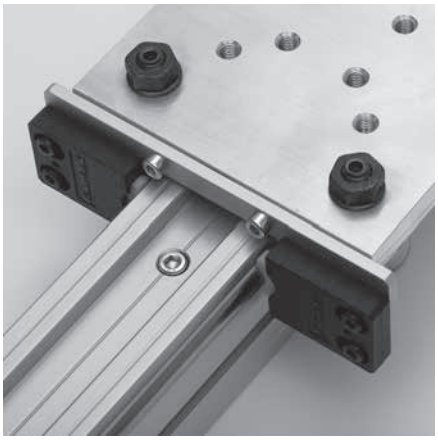

Application
The support fits on the slide plate base 50. Together with the grease scraper the slide for a small linear guide is complete.

Specification
Aluminium, anodised in natural colours

Order data	Order number
Support for grease scraper	L16–43

End stop

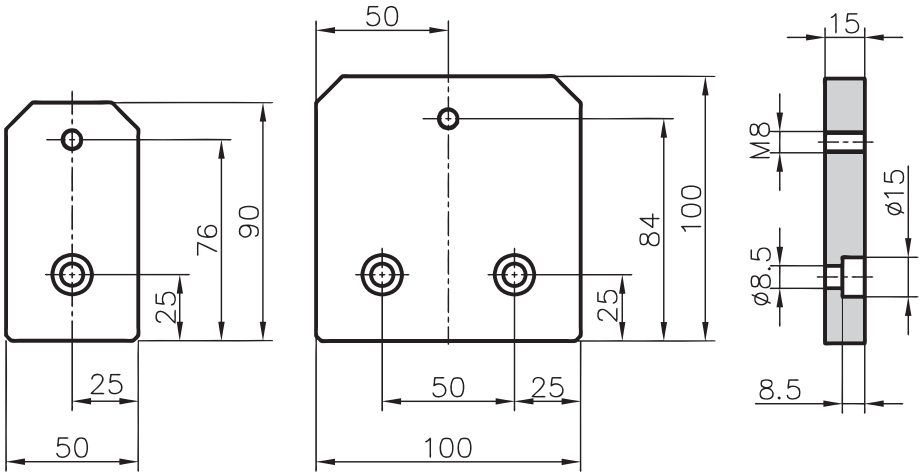

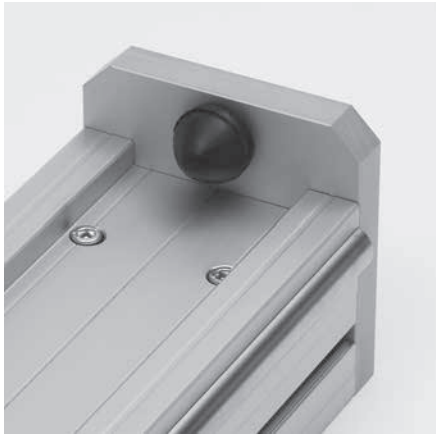

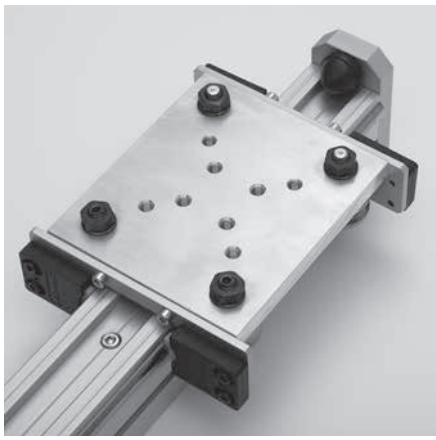

Application
The end stopper in combination with the buffer is normally screwed on the end of the extrusions base 50, serving as a stop for the linear guides.

Specification
Aluminium, anodised in natural colours

Order data	Order number
End stop 50	L16–55
End stop 100	L16–53

Buffer

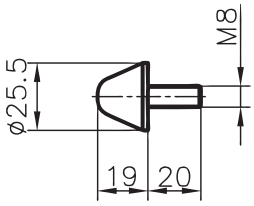

Application
For use as an end stop for linear guides

Specification
rubber, highly deformable

Order data	Order number
Buffer	L16–50

C-guide rails

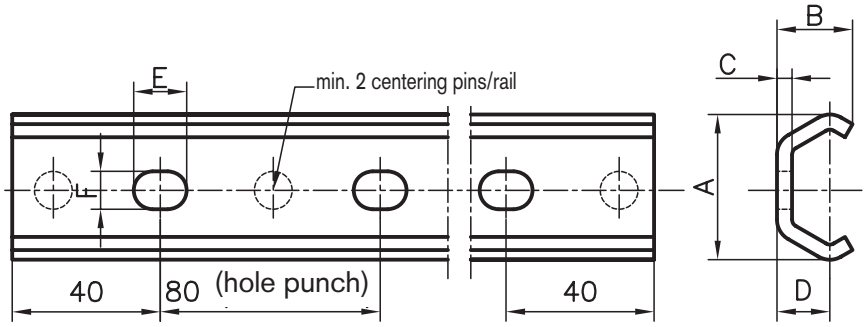

Measurement data							
Size	**A**	**B**	**C**	**D**	**E**	**F**	**kg/m**
20	19.2	10	2	7	7	5	0.47
30	29.5	15	2.5	10	8.4	6.4	0.9
45	46.4	24	4	15.5	11	9	2.3

Application

The guide rail can be subjected to high loads thanks to its optimum shaping. It is screwed directly onto the structure extrusions. Centering pins align the rail parallel with the extrusion.
Combined with the suitable slides, it is possible to produce accurate and inexpensive linear guides. Three sizes are available.

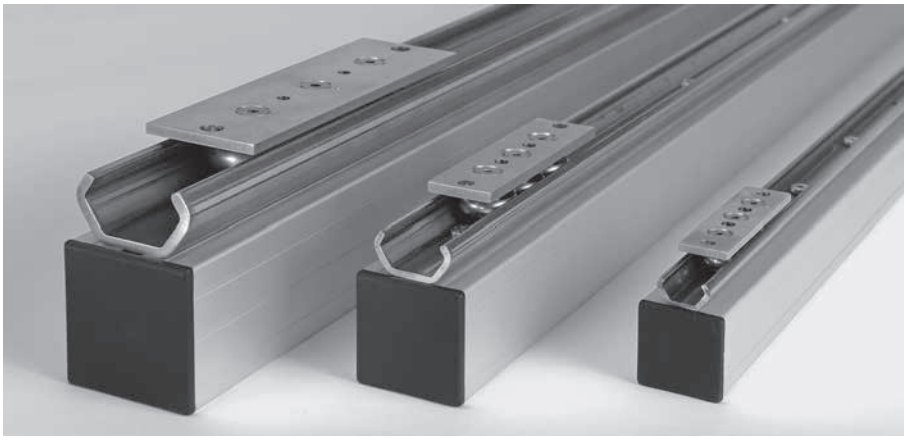

Specification

Stainless steel

Order data	Order number
Size 20	
Standard length 4000 mm	L20–01–00/4000
Cut to length	L20–01–02–02/…
Size 30	
Standard length 4000 mm	L30–01–00/4000
Cut to length	L30–01–02–02/…
Size 45	
Standard length 6080 mm	L45–01–00/6080
Cut to length	L45–01–02–02/…

Slides

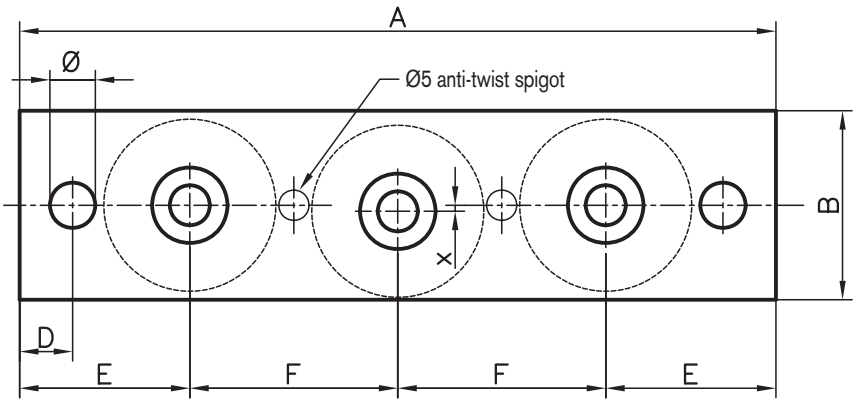

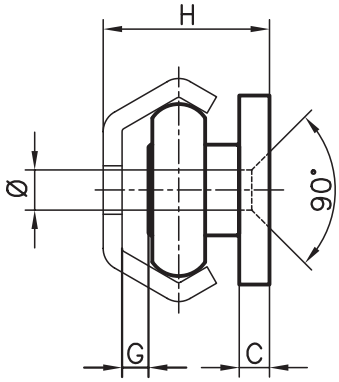

Measurement data

Size	A	B	C	D	E	F	G	H	Ø	ø	x
20	75	18	3	6	18.5	19	2.5	16	5.2	4.5	0.5
30	96	25	4	6	23.5	24.5	3.5	22	6.2	5.5	0.5
45	155	45	4	8	34	43.5	5	31	8.2	6.6	0.6

Load ratings

Size	F_{rad}	F_{ax}
20	300N	170N
30	800N	400N
45	1600N	860N

Application

Mainly for horizontal and vertical guides, in particular for drawer runners subjected to heavy loads, lifting and sliding doors as well as height adjustable work benches, or any application where larger loads need to be moved back and forth.

Specification

Stainless steel

Other slide dimensions available on request

Technical data

Temperature range:
–20°C to max. +100° C max.
Displacement speed: 1.5 m/s

The flat slide means the design is compact. It is screwed directly onto the structure extrusions. Two anti-twist spigots position the slide parallel to the extrusion.

Both outer rollers support the load. Markings show the contact side to the guide rail. The middle roller can be set to the desired preload using the excentric screw.

Order data	Order number
Slide including rollers	
Size 20	L20–20
Size 30	L30–20
Size 45	L45–20

Roller system

Application
The roller tracks, together with special clamps, are simply mounted to the Kanya 50, 40 and 30 base aluminium extrusions.

The roller track system can be used for all types of conveyance and removal of material and goods. Examples of typical applications
- Roller transport via gravity for all types of boxes
- Roller transport connections between workstations
- Roller conveyance to work benches
- Material roller transport within a machine production plant
- Accurate positioning of boxes

The range includes rollers with and without guide flange. All roller tracks are also available as ESD version.

Technical description
Roller tracks are made from bent steel sheets, galvanised, 0.8mm, width 36mm, overall height 36mm
Axes made from zinc-coated steel, diameter 3mm
Bore holes with diameter 4.1mm at the base of the roller track

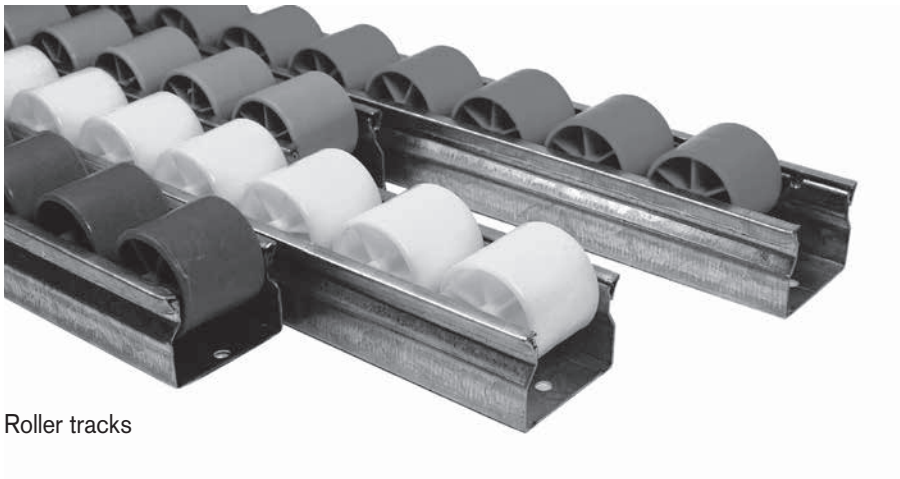
Roller tracks

Vertical load up to 40 kg per roller (lying on flat surface)

Product advantages
The special shape of the steel sheet allows the roller track to close when under load. This significantly increases the resistance against twisting or bending.

Loads
The roller tracks (one pair) can be subjected to loads as follows, according to the length:

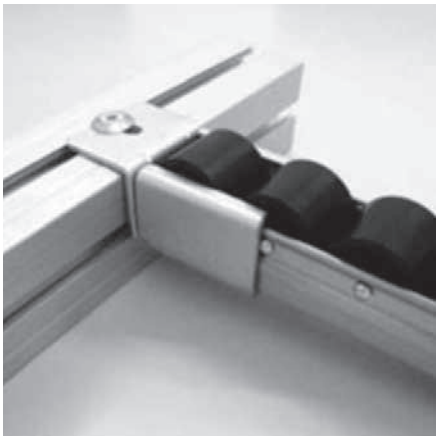
Clamping for easy fixing of roller tracks to extrusions and tubes

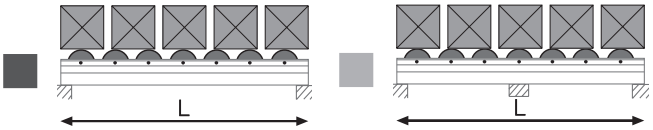

Measurement data

L (mm)	1.500	1.400	1.300	1.200	1.100	1.000	900	800	700	600	500			
Σ Kgs.	75	80	88	95	105	117	130	153	177	212	250			
L (mm)	3.000	2.800	2.600	2.400	2.200	2.000	1.800	1.600	1.500	1.400	1.300	1.200	1.100	1.000
Σ Kgs.	132	148	164	185	205	230	259	304	356	400	450	500	550	600

Roller tracks, flat type L80 –1/L80 –1–ESD

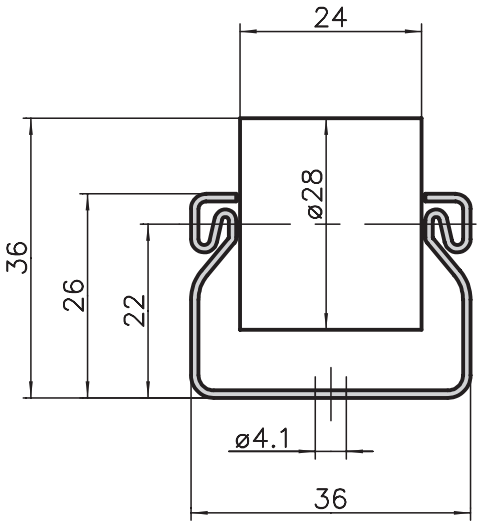

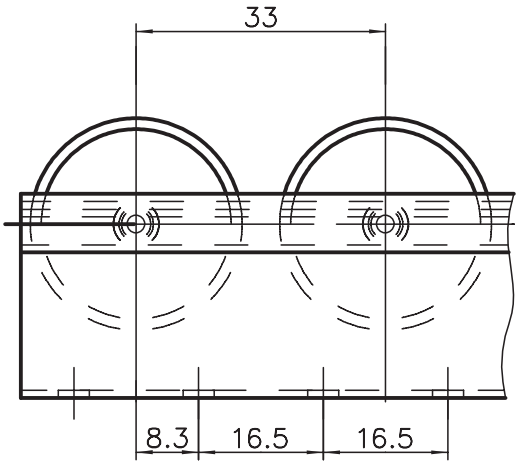

Application

These roller tracks are ideal for use with storage and transportation racks. For lightweight transport of items, this self-supporting rail can be used for up to 3m. For packaging tables, assembly workstations and devices in process operations, these simplify the transport of goods and logistics.

Specification

Steel rail
Plastic rollers with steel axes

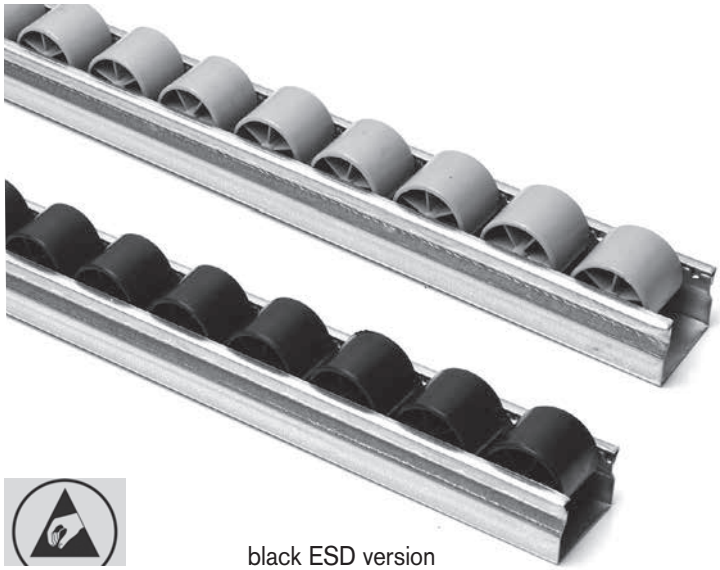

black ESD version

Technical description

Distance between roller axes is 33mm, weight: 0.86 kg/m; rollers made of polypropylene, diameter 28mm, width 24mm, ESD version with electrostatic discharge (resistance coefficient during throughput of electricity of 28.8Ω/cm²)

Rollers available in other colours on request when ordering more than 300m.

Order data	Order number
Roller track	
Standard length	L80–1–00/3000
Cut to length	L80–1–S2–S2/...
ESD roller track	
Standard length	L80–1–ESD–00/3000
Cut to length	L80–1–ESD–S2–S2/...

Roller tracks with guide flange type L80–2/L80–2–ESD

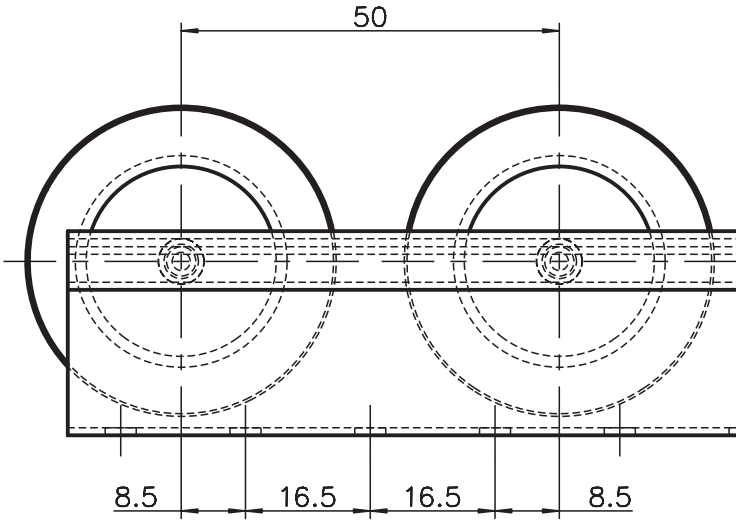

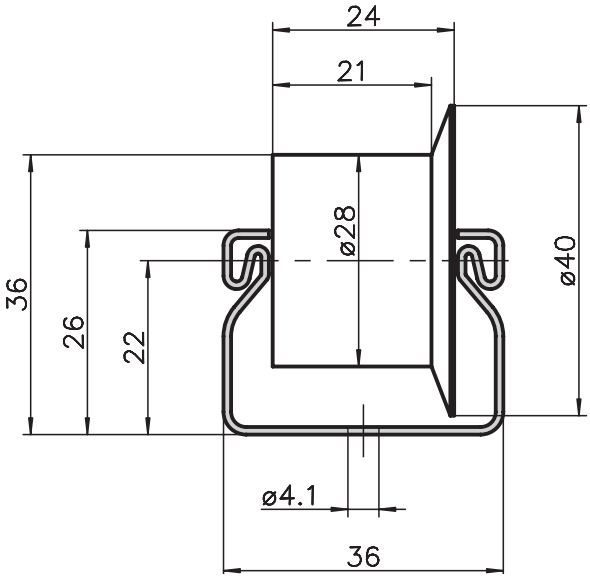

Application
These roller tracks are ideal for use with storage and transportation racks. Light-weight transport of items is kept within the track by the side guide.

Specification
Steel rail
Plastic rollers with steel axes

black ESD version

Technical description
Distance between roller axes is 50mm, weight: 0.9 kg/m; rollers made of polypropylene, diameter 28mm, width 25mm. ESD version with electrostatic discharge (resistance coefficient during throughput of electricity of 28.8Ω/cm²)

Rollers available in other colours on request when ordering more than 300m..

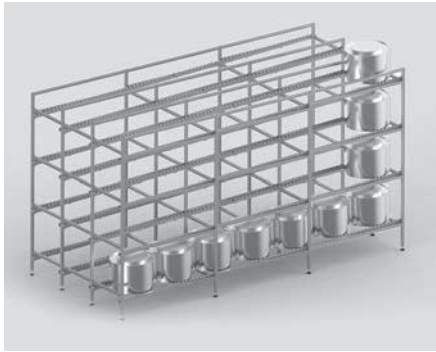

Order data	Order number
Roller track with guide flange	
Standard length	L80–2–00/3000
Cut to length	L80–2–S2–S2/…
Roller track with ESD guide flange	
Standard length	L80–2–ESD–00/3000
Cut to length	L80–2–ESD–S2–S2/…

Centre guide to roller tracks type L80–50, white type L80–50 ESD, black

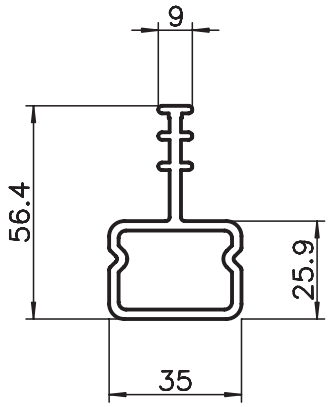

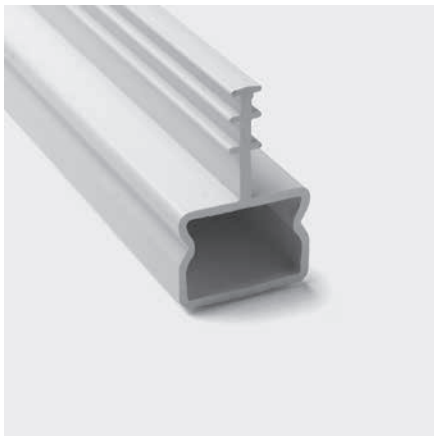

Application

For guiding and positioning on the transport tracks. Quick visual overview of each individual transport track and ideal product for guiding cardboard boxes, as a replacement for the guide flange rollers. This centre guide stops the items being transported from moving sideways.

Technical description

Made of extruded, recycled thermoplastic plastic strip with no colouring; weight: 0.485 Kg /m; colour: white (standard version), ESD black; ESD features: electric resistance of 28 Ω/cm²; ABS 103–104 Ω/cm²

Order data	Order number
Centre guide, white	
Standard length 3000mm	L80–50–00/3000
Centre guide, white	
Cut to length	L80–50–S2–S2/….
ESD centre guide, black	
Standard length 3000mm	L80–50–ESD–00/3000
ESD centre guide, black	
Cut to length	L80–50-ESD–S2–S2/….

Outer guide type L80–70, white type L80–70-ESD, black

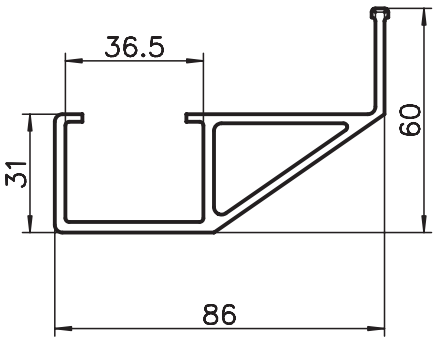

Technical description

Material design same as centre guide; weight 0.80 kg/m;
Position of side wing: 50 mm from the edge of the wheel

Application

For lateral guiding of goods being transported. For guiding and positioning on the transport tracks. Ideal for maximising the storage space on the shelf since this outer version requires virtually no installation space.

Order data	Order number
Outer guide, white	
Standard length 3000mm	L80–70–00/3000
Outer guide, white	
Cut to length	L80–70–S2–S2/…
ESD outer guide, black	
Standard length 3000mm	L80–70–ESD-00/3000
ESD outer guide, black	
Cut to length	L80–70–ESD–S2–S2/…

Roller track adapter type L80–90

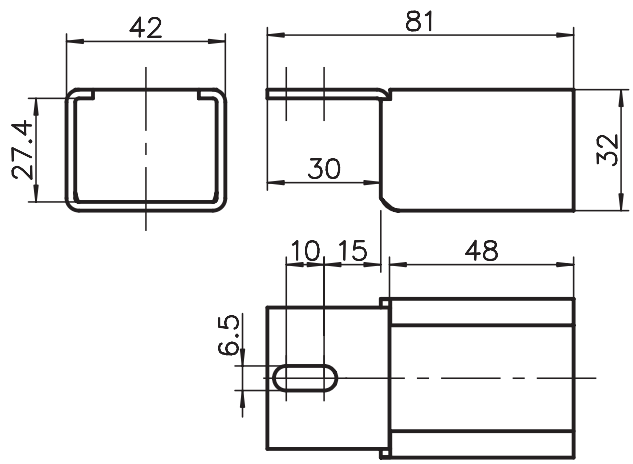

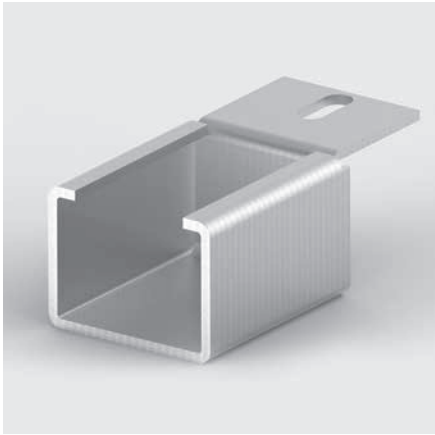

Application

This roller track adapter can be screwed onto the 30/40/45/50 series base extrusions. The roller tracks are pushed in and attached to an extrusion structure.

Replacing or moving them is simple.

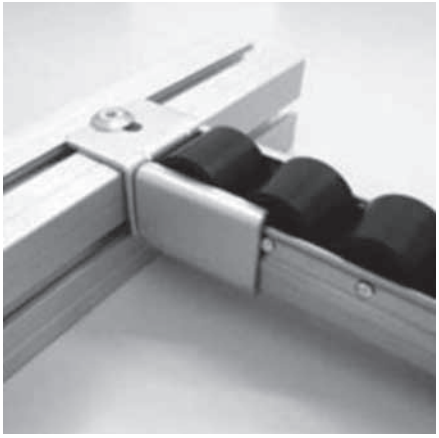

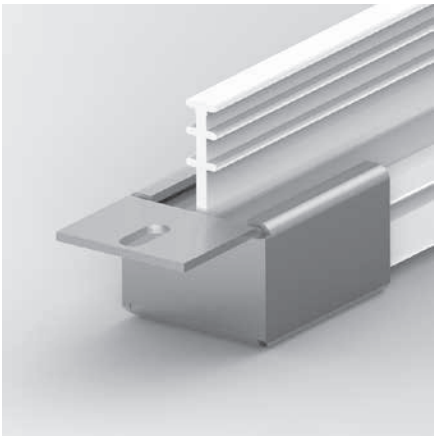

Order data	Order number
Roller track adapter	L80–90

Roller stopper type L80–30

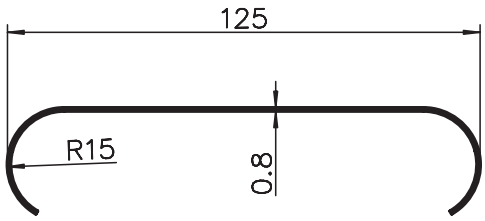

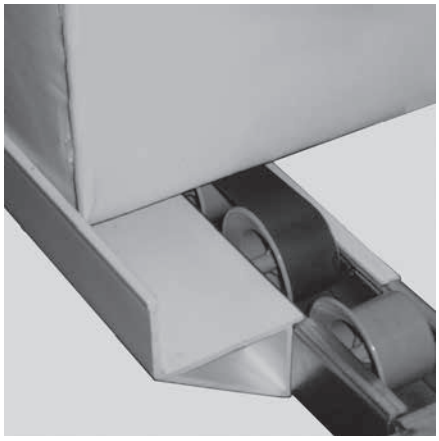

Application

This roller stopper can be used to finish off the roller tracks to make it easier to remove containers, transportation boxes or packages. The goods being transported slides onto the roller stop and comes to a standstill. The items being transported can now be removed without having to lift them.

Order data	Order number
Roller stopper	L80–30

Anti-return type L80–31

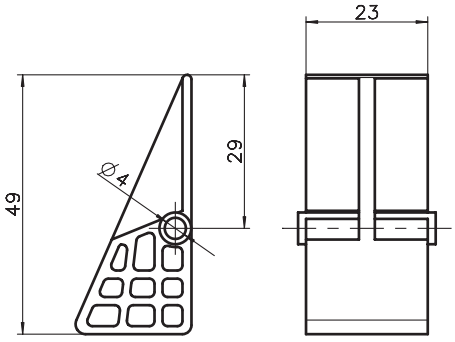

Application

This element prevents the return of the item being transported. Installed in the right place, this easy-to-install element offers a great solution to the flow of material.

This piece can be used as a simple stop at the end of a roller track to prevent boxes or containers from falling off.

Order data	Order number
Anti-return	L80–31

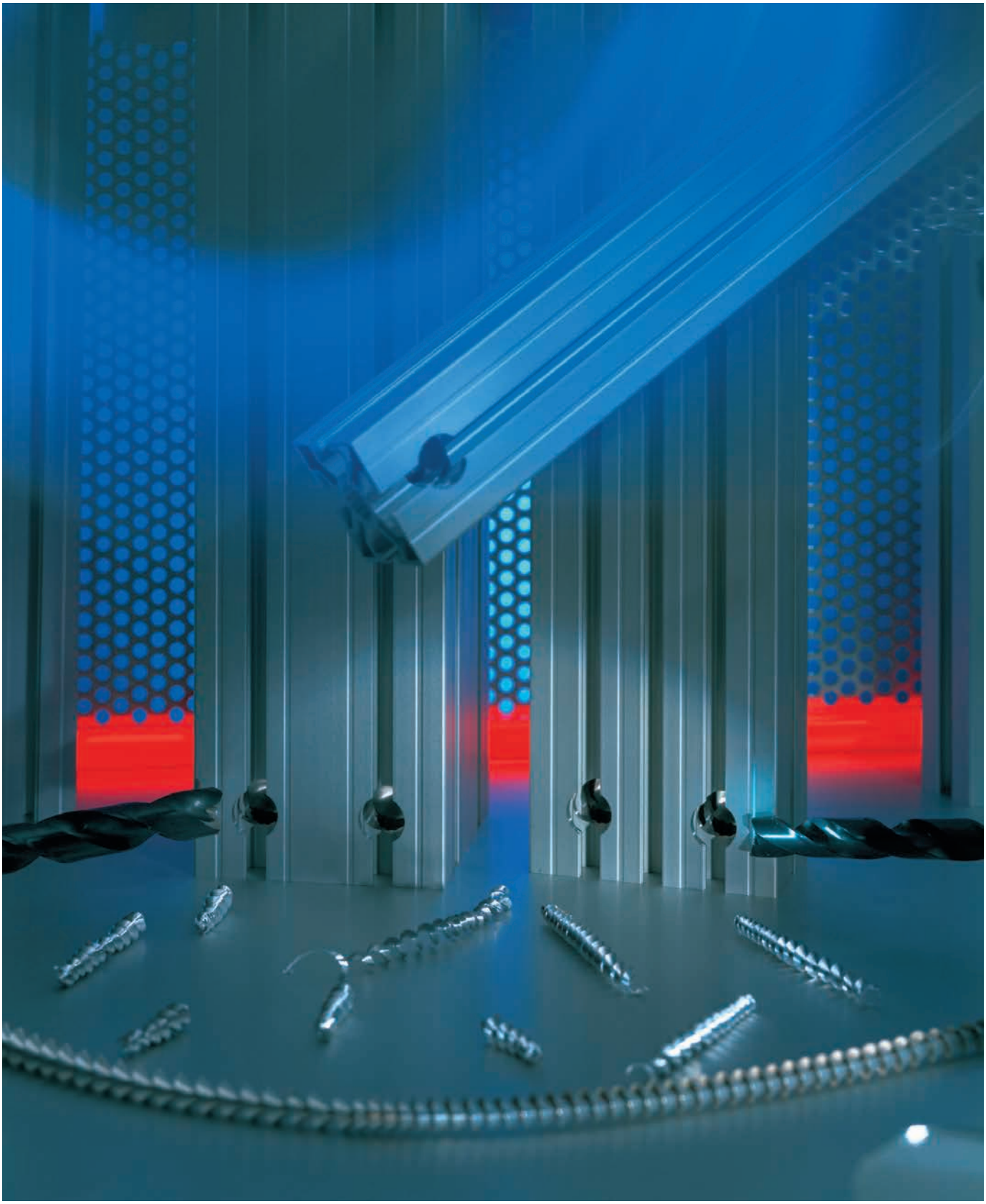

Drill jig and special drill bits

Application

The drill jig and special drill bits make it easy to drill the holes for KANYA's patented PVS connector. The main advantage of the drill jig is that it clamps directly onto the extrusion. The rotating stop, for square or mitred cuts, guarantees the precise drilling distance.

The HSS special drill bit, with the MT2 Morse taper shank, is ground flat to cut the extrusion surface. It can be re-sharpened as often as necessary.

A special drill bit with a 90° point is used to drill the C03–8, B01–8 softline extrusion and the A02–8 and C02–8 angle extrusions.

Standard 90° joint

"25" stop

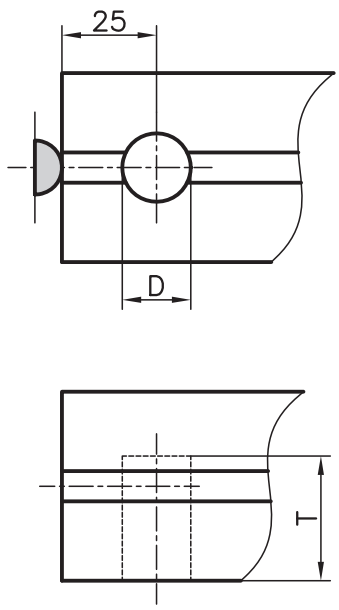

Mitre joint

"32" stop

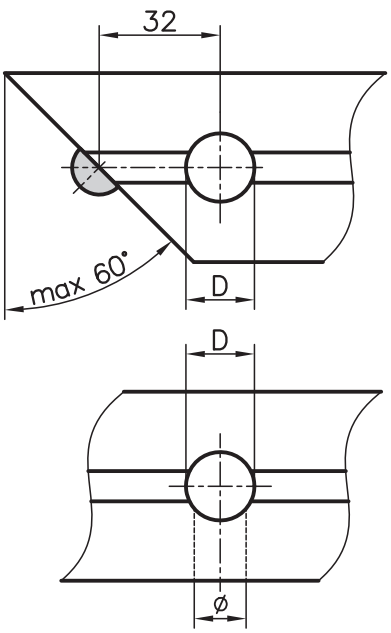

That drill, allows a connection for a parallel connector at any position at the extrusion.

Machining data

Extrusion type	D	Ø	A1	A2	T
50 base	18.1	13.7	25	32	33
45 base	18.1	13.7	25	32	30.5
40 base	18.1	13.7	25	32	28
30 base	15.1	12.1	25	32	22
20x47/95/150 base	15.1		25	32	18
20x20/40 base	7.3		25	25	

* with a centre hole ø 6mm

Note

The 7.3 mm Ø holes for 20x20/40 extrusions are drilled using a normal twist drill bit without a drill jig.

Order data	Order number
Drill jig	
50/45/40/30 base	AB95–0
Special drill bits	
to fit the drill jig	
50/45/40 base	A96–1
30 base	B96–2
A02–8, C02–8, C03–8 extrusions	A96–3
B01–8 extrusion	B96–3

Allen key set SW 1.5 –10

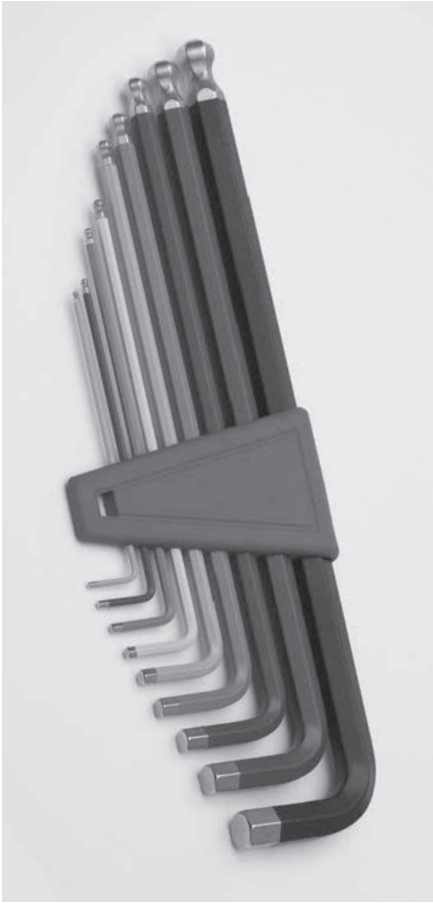

Application
For all screw-in parts with hex key.

The ball-shaped ends allows it to screw into angular positions with the allen key. This is necessary for the function of the new patent PVS®-EASY connector.

Order data	Order number
Allen key set SW 1.5 – 10	E97–5

SW = wrench size

KANYA Allen key SW 6

Specification
Zinc-coated steel

Order data	Order number
KANYA Allen key SW 6 short	E97–1
KANYA Allen key SW 6 long	E97–2

Allen key for PVS® screw Safe

Application
Special Allen key for the PVS® connectors with PVS® screw Safe M12x12.

Order data	Order number
KANYA Allen key for PVS® screw Safe	E97–2–S 125–80–S

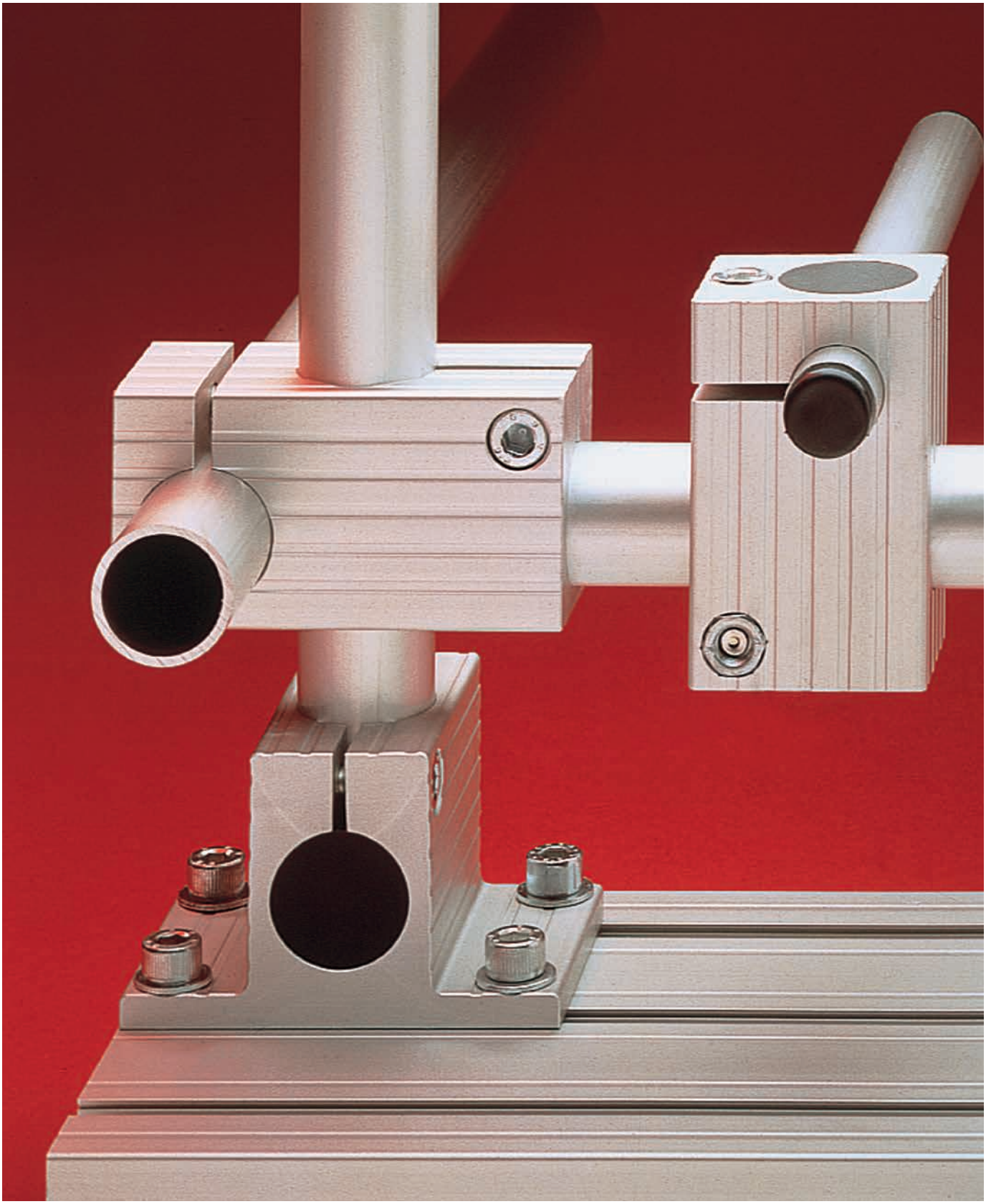

Summary of Contents

Extrusion tolerances – extract from EN 12020-02

1. Straightness tolerances

Cavity extrusions shall not exceed the values stated in the table for straightness tolerances h1. The deviation h2 shall not exceed a maximum of 0.3 mm over any length of l2 = 300 mm.

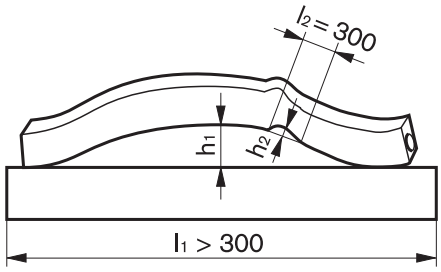

Length l_1 in m	bis 1	bis 2	bis 3
Tolerance h_1 in mm	0.7	1.3	1.8

2. Distortion Tolerance v

The distortion tolerance v for cavity extrusions subject to length is shown in the table.

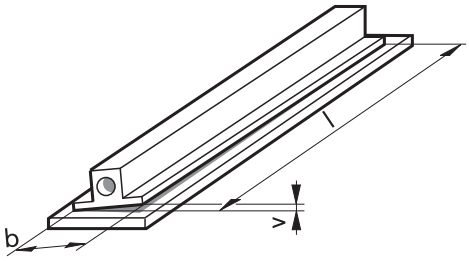

Width b in mm Messurement Range		Flatness Tolerance v in mm for lenghts in mm		
over	up to	– bis 1000	over 1000 up to 2000	over 2000 up to 3000
–	25	1.0	1.5	1.5
25	50	1.0	1.2	1.5
50	75	1.0	1.2	1.2
75	100	1.0	1.2	1.5
100	125	1.0	1.5	1.8

3. Angular Tolerance w

If side lengths are unequal, the angular tolerance relates to the angle of the shorter side.

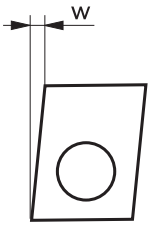

Width b in mm		Inclination tolerance w
over	up to	in mm
–	30	0.3
30	50	0.4
50	80	0.5
80	100	0.6
100	120	0.7

4. Diameter D/D1 Tolerances

The tolerances shown in the Table below relate to the Diameter D/D1 in each case, as shown in the technical drawings.

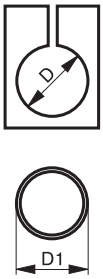

Diameter D/D1 in mm	D Tolerance in mm	D1
12	0 / +0.05	0 / –0.1
15	0 / +0.05	0 / –0.1
20	0 / +0.1	0 / –0.15
30	0 / +0.1	0 / –0.2
40	0 / +0.1	0 / –0.2
50	0 / +0.1	0 / –0.2

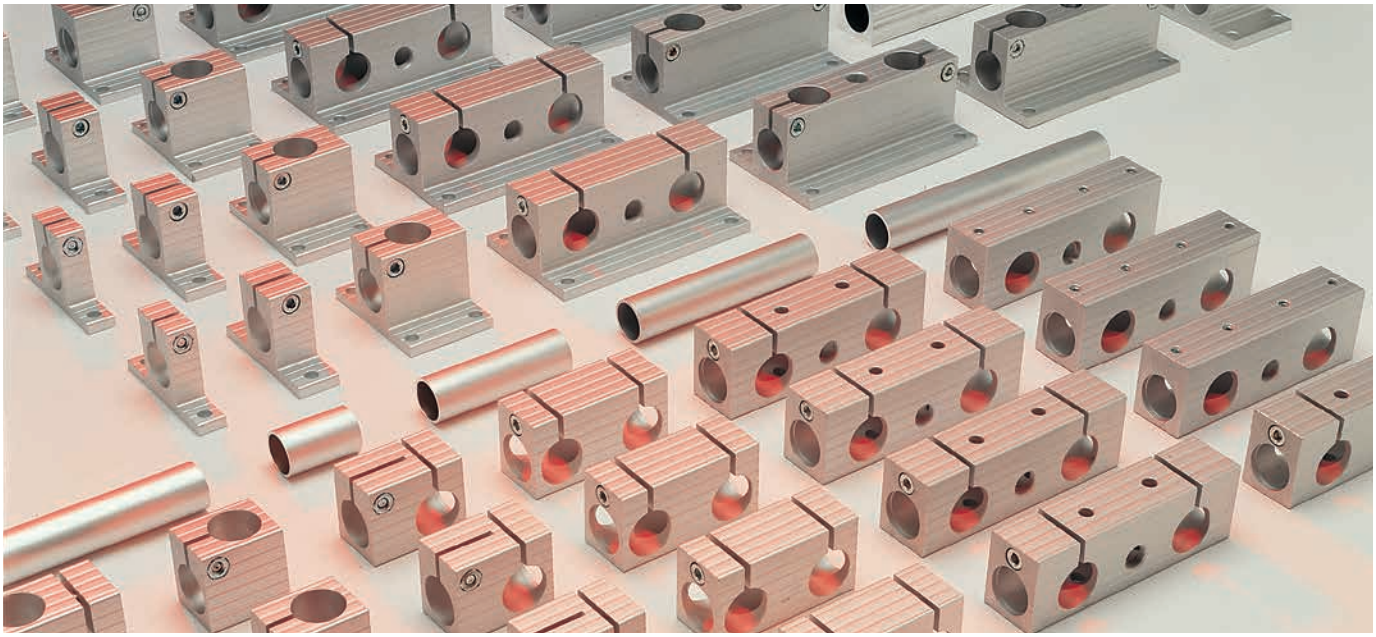

The KANYA modular construction kit system really offers an unlimited range of applications for very special design and construction problems.

Examples from the Field of Apparatus and Machine Construction.

The KANYA Tube Clamp System provides creative and versatile solutions in response to a huge variety of requirements in the field of machine and apparatus construction. Perfect function combined with outstanding appearance. Innovation knows no bounds!

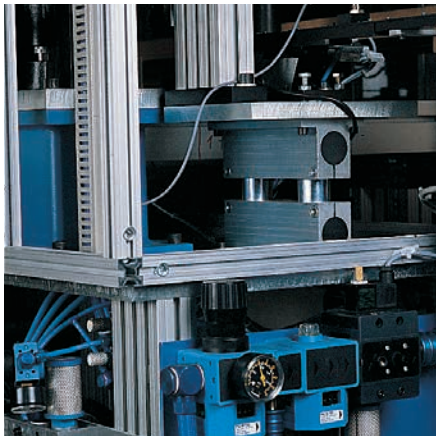

Handling equipment carrier with simple adjustment.

Spray fixture in a powder coating unit. The low weight of the fixture keeps the acceleration and deceleration forces down. The joints have good electrical conductivity properties.

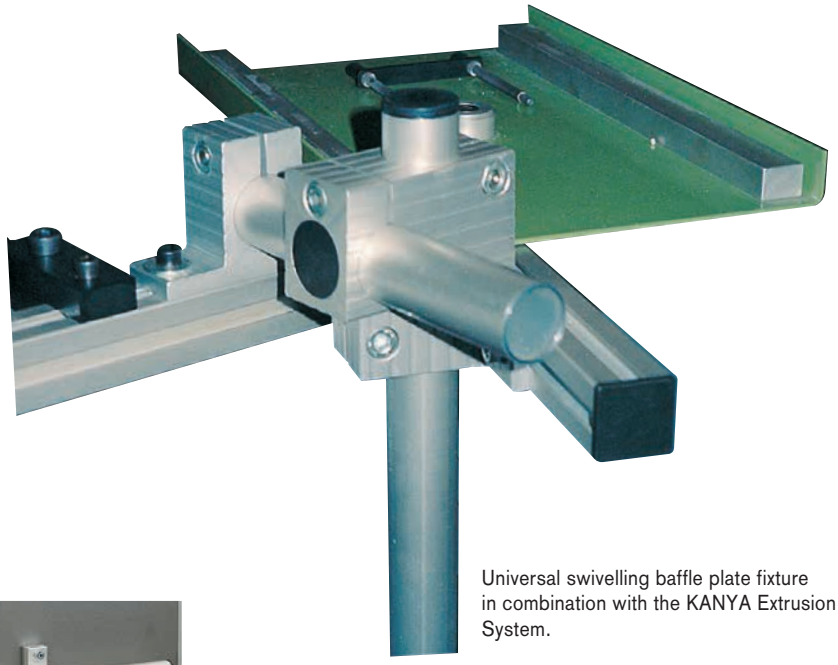

Universal swivelling baffle plate fixture in combination with the KANYA Extrusion Joint System.

Push-pull device on an equipment and storage trolley for telephone installation work.

An easily adjustable photocell fixture.

Device to hold optical test equipment

Swing arm with cable reel fixture for automatic insulating unit.

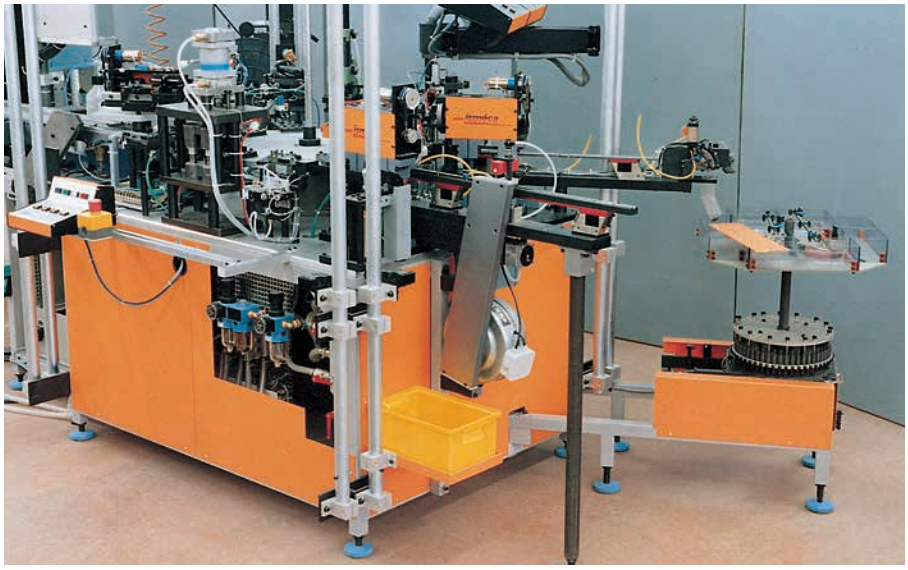

Protective covering guide device on automatic assembly unit, with weight compensation in the aluminium tubes.

Continuously adjustable fixture for the ink jet heads on a coder.

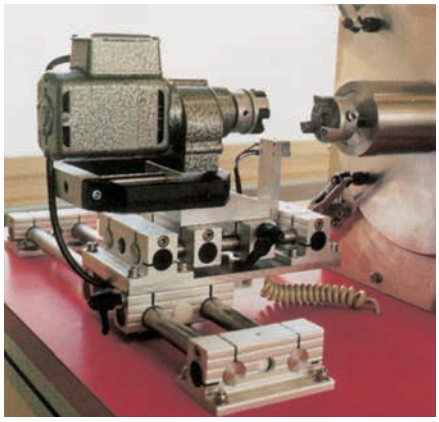

Couplable / decouplable drive on an X/Y adjustable unit for a micro-coating drum. The electric motor is in the decoupled position.

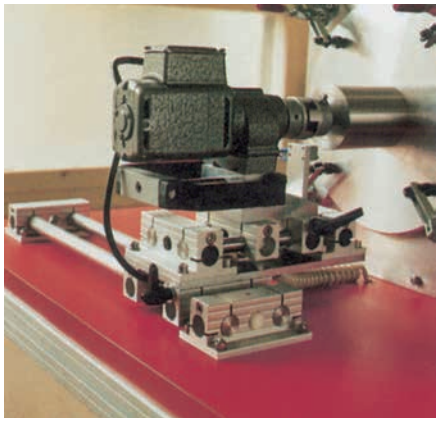

The electric motor in the coupled position.

Process engineering calls for universal simplicity and speed when equipment has to be rearranged. What could be more suitable than a well thought-out Tube Clamp System?

Examples of Laboratory and Process Engineering Uses.

Slacken off the clamp screws, move the joint and secure it in the new position: the arrangement you want is set in place. But the Tube Clamp System's light and elegant appearance also makes it excellent for use in permanently fixed structures. Optimal stability is guaranteed thanks to the precision-made clamp joints, which are manufactured on CNC machines. KANYA will also manufacture special parts on request, and is always ready to help by providing professional advice.

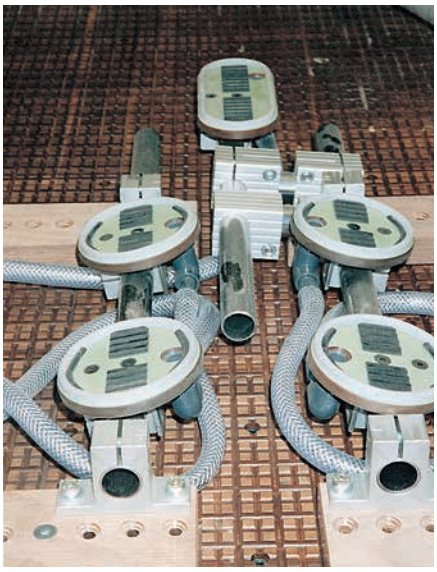

Adjustable vacuum plate to process a variety of chair backs.

Bubble column reactor for liquid / gas phase reactions, with a tempering sheath and gas absorption device.

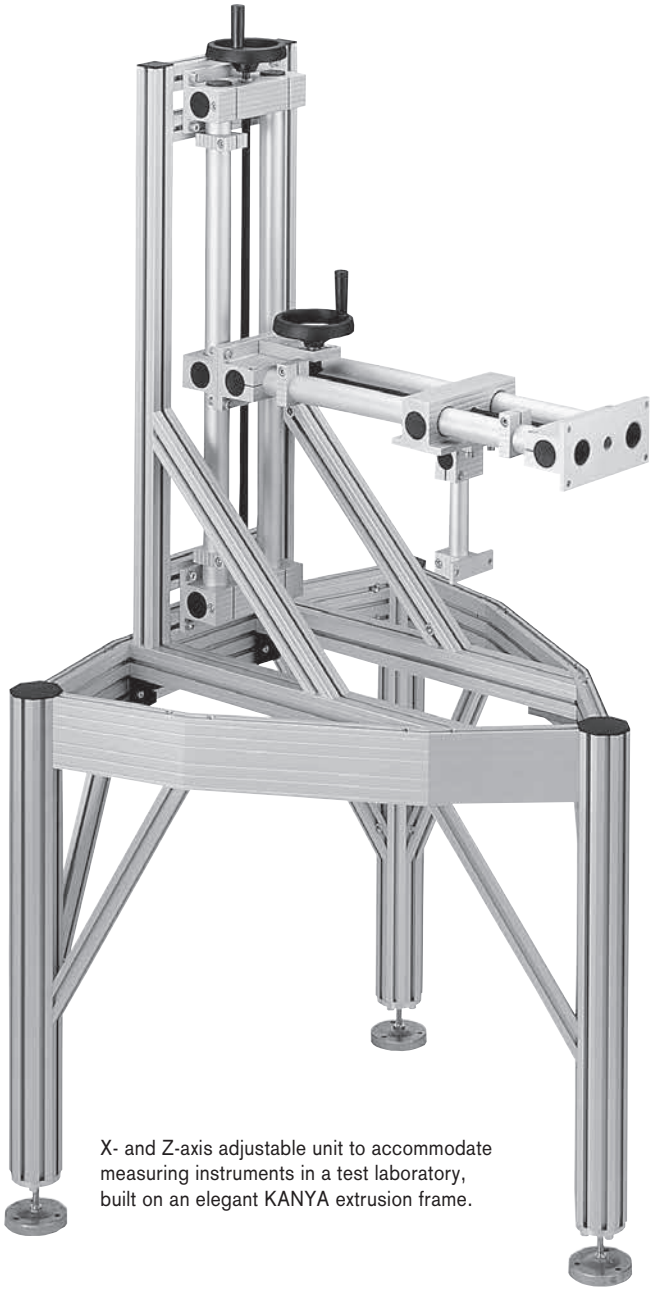

X- and Z-axis adjustable unit to accommodate measuring instruments in a test laboratory, built on an elegant KANYA extrusion frame.

Labelling machine with swing arm for gluing.

Test equipment with tube structures in a medical laboratory.

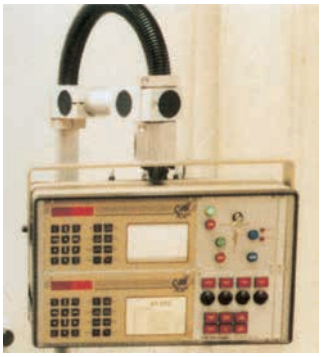

Adjustable fixture for control box.

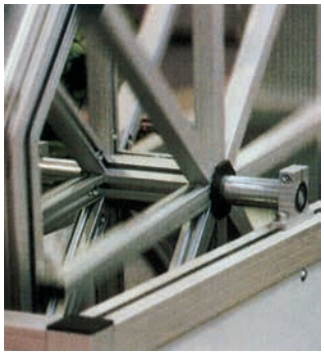

Mounting for a spoked wheel.

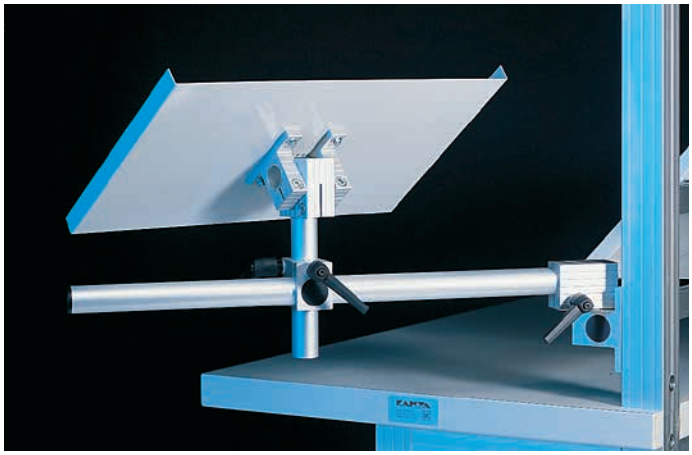

Document holder with swing arm, adjustable for height and length.

Clamp Ring

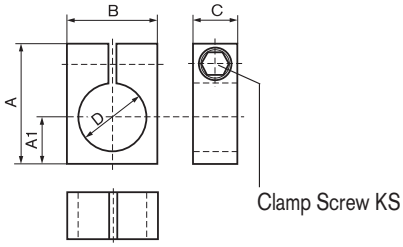

Use
Normally used as a stop, or as a holder for limit switches or similar.

Nominal Diameter	Dimensions A	A1	B	C	D	KS	Weight in kg	Order number
12	24	8	16	32	12	M4	–	on request
20	36	13	30	20	20	M6	0.045	R02–15
30	52	20	40	20	30	M8	0.080	R03–15
40	62	25	50	20	40	M8	0.105	R04–15
50	72	30	60	20	50	M8	0.135	R05–15

Joining Clamp

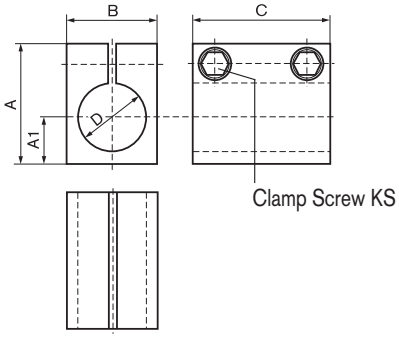

Use
To extend tubes and as a stop for large forces.

Nominal Diameter	Dimensions A	A1	B	C	D	KS	Weight in kg	Order number
12	24	8	16	32	12	M4	–	on request
20	36	13	30	40	20	M6	0.085	R02–01
30	52	20	40	60	30	M8	0.225	R03–01
40	62	25	50	80	40	M8	0.395	R04–01
50	72	30	60	100	50	M8	0.625	R05–01

For diameter D tolerances, see page 233

Angle Clamp

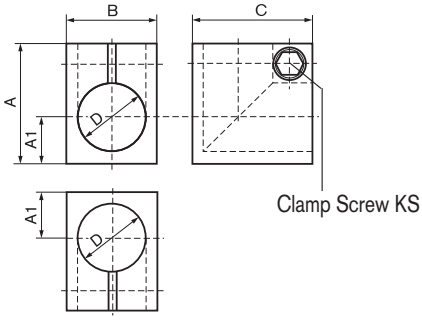

Use
Attractive corner joint for normal loads.

For reasons of stability, it is recommended that tubes in angle clamp joints are cut at 45°.

Nominal Diameter	Dimensions A	A1	B	C	D	KS	Weight in kg	Order number
12	24	8	16	32	12	M4	–	on request
20	36	13	30	36	20	M6	0.060	R02–02
30	52	20	40	52	30	M8	0.150	R03–02
40	62	25	50	62	40	M8	0.225	R04–02
50	72	30	60	72	50	M8	0.320	R05–02

T Clamp

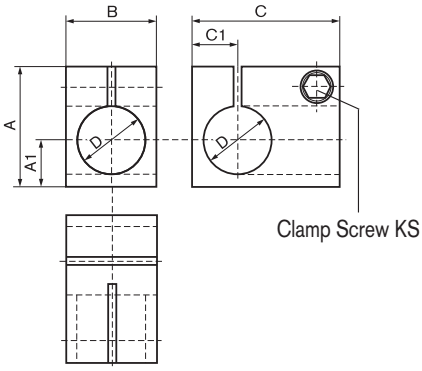

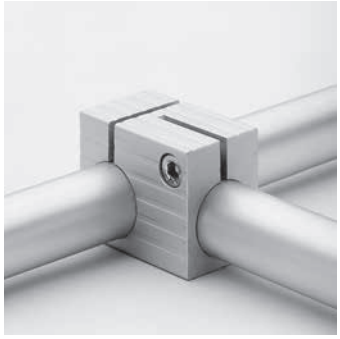

Use
Cross joints where only one tube needs to be movable.

Nominal Diameter	Dimensions A	A1	B	C	D	KS	Weight in kg		Order number
12	24	8	16	32	12	M4	–		on request
20	36	13	30	45	13	20	M6	0.080	R02–03
30	52	20	40	65	20	30	M8	0.215	R03–03
40	62	25	50	85	25	40	M8	0.365	R04–03
50	72	30	60	105	30	50	M8	0.560	R05–03

For diameter D tolerances, see page 233

Parallel Clamp

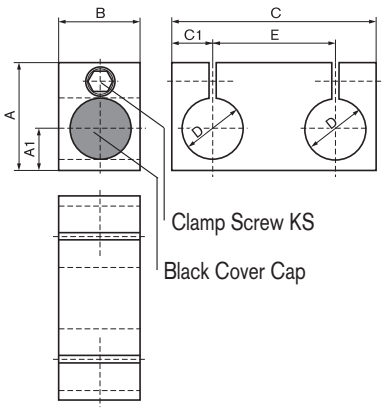

Use
To strengthen structures (by doubling) or to extend tubes on different levels.

Nominal Diameter	Dimensions A	A1	B	C	C1	D	E	KS	Weight in kg	Order Number
12	24	8	16	42	9	12	24	M4	–	on request
20	36	13	30	66	13	20	40	M6	0.110	R02–04
30	52	20	40	100	20	30	60	M8	0.310	R03–04
40	62	25	50	130	25	40	80	M8	0.535	R04–04
50	72	30	60	160	30	50	100	M8	0.815	R05–04

Cross Clamp

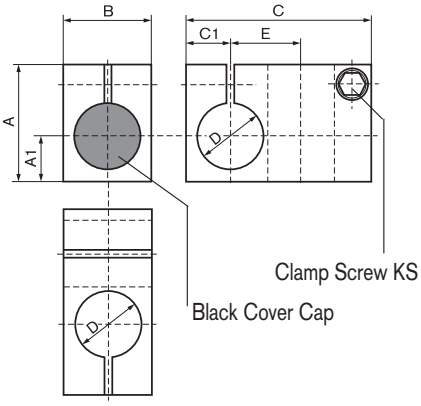

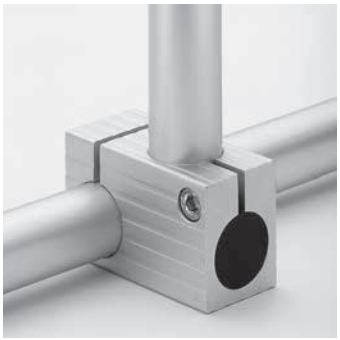

Use
This is the most frequently used clamp. It can hold two freely movable tubes, offset at 90°.

Nominal Diameter	Dimensions A	A1	B	C	C1	D	E	KS	Weight in kg	Order Number
12	24	8	16	38	9	12	13	M4	0.022	R01–05
20	36	13	30	58	13	20	22	M6	0.095	R02–05
30	52	20	40	84	20	30	32	M8	0.235	R03–05
40	62	25	50	104	25	40	42	M8	0.370	R04–05
50	72	30	60	124	30	50	52	M8	0.535	R05–05

For diameter D tolerances, see page 233

Cross Clamp with different Ø

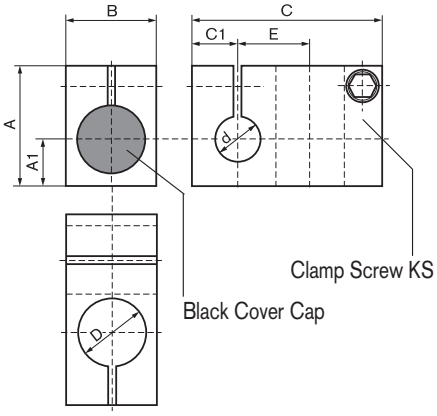

Use
This is the most frequently used clamp. It can hold two freely movable tubes, offset at 90°.

Nominal Diameter	Dimensions A	A1	B	C	C1	D	d	E	KS	Weight in kg	Order Number
20 / 12	36	13	30	58	13	20	12	22	M6	0.102	R02–07.12
30 / 12	52	20	40	84	20	30	12	32	M8	–	on request
30 / 20	52	20	40	84	20	30	20	32	M8	0.255	R03–07.20
40 / 20	62	25	50	104	25	40	20	42	M8	0.420	R04–07.20
40 / 30	62	25	50	104	25	40	30	42	M8	0.400	R04–07.30
50 / 40	72	30	60	124	30	50	40	52	M8	0.585	R05–07.40

For diameter D tolerances, see page 233

Cross T-Clamp

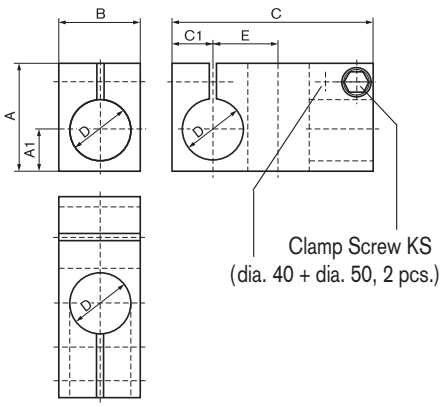

Use
Tubes can exit from this clamp in three directions, but only the same two tubes as in the Cross Clamp (page 214) pass all the way through the joint.

Nominal Diameter	Dimensions A	A1	B	C	C1	D	E	KS	Weight in kg	Order Number
12	24	8	16	40	9	12	13	M4	–	on request
20	36	13	30	65	13	20	22	M6	0.105	R02–10
30	52	20	40	98	20	30	32	M8	0.285	R03–10
40	62	25	50	125	25	40	42	M8	0.470	R04–10
50	72	30	60	155	30	50	52	M8	0.730	R05–10

Universal Clamp

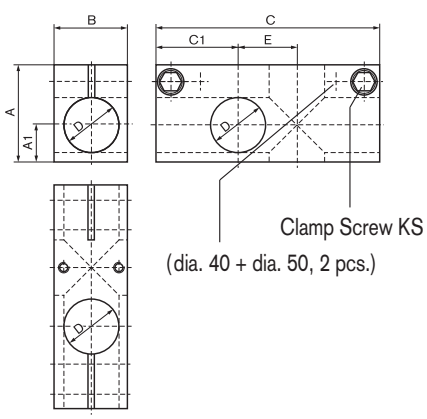

Use
As its name implies, the four tube exits on this joint make it suitable for universal use.

Nominal Diameter	Dimensions A	A1	B	C	C1	D	E	KS	Weight in kg	Order Number
12	24	8	16	53	20	12	13	M4	–	on request
20	36	13	30	82	30	20	22	M6	0.145	R02-11
30	52	20	40	122	45	30	32	M8	0.375	R03-11
40	62	25	50	162	60	40	42	M8	0.650	R04-11

For diameter D tolerances, see page 233

Horizontal Clamp

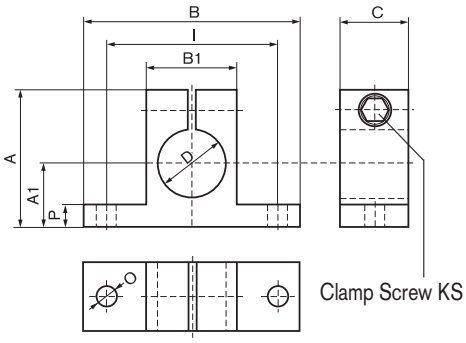

Use
This joint is normally used as a pedestal bearing. However, it can also be used as a holder for screwed-on parts.

Nominal Diameter	Dimensions A	A1	B	B1	C	D	I	O	P	KS	Weight in kg	Order Number
12	28	12	35	16	15	12	25	6	4	M4	0.015	R01–60
15	45	22	65	30	20	15	50	7	8	M6	0.088	R15–60
20	45	22	65	30	20	20	50	7	8	M6	0.080	R02–60
30	60	28	95	40	30	30	75	9	8	M8	0.170	R03–60
40	72	35	95	50	40	40	75	9	10	M8	0.295	R04–60
50	82	40	120	60	50	50	100	9	10	M8	0.470	R05–60

Tube Cleat

Nominal Diameter	Dimensions A	A1	B	B1	C	D	I	O	P	KS	Weight in kg	Order Number
30	60	28	95	40	20	30	75	9	8	M8	0.115	R03–65
40	72	35	95	50	20	40	75	9	10	M8	0.150	R04–65
50	82	40	120	60	20	50	100	9	10	M8	0.195	R05–65

For diameter D tolerances, see page 233

Vertical Clamp

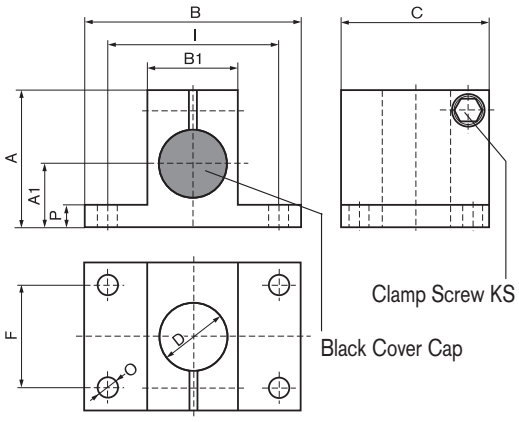

This is the elementary component for a wide variety of constructions, whether as a flange, a build-on joint or a holder.

Nominal Diameter	Dimensions A	A1	B	B1	C	D	F	I	O	P	Weight KS	in kg	Order Number
12	28	12	35	16	32	12	–	25	6	4	M4	0.029	R01-50
20	45	22	65	30	45	20	25	50	7	8	M6	0.135	R02-50
30	60	28	95	40	65	30	50	75	9	8	M8	0.310	R03-50
40	72	35	95	50	75	40	50	75	9	10	M8	0.440	R04-50
50	82	40	120	60	85	50	50	100	9	10	M8	0.610	R05-50

For diameter D tolerances, see page 233

End Swivel Clamp

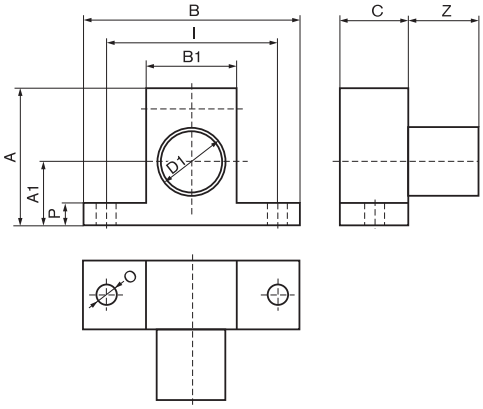

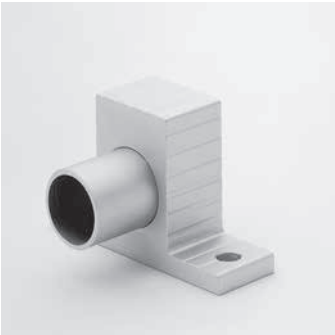

Use
The tube is firmly pressed into this clamp, making it particularly suitable for oblique connections. Can also be used for permanent swivel functions.

Nominal Diameter	Dimensions A	A1	B	B1	C	D1	I	O	P	Z	Weight in kg	Order Number
12	28	12	35	16	15	12	25	6	4	17	–	on request
20	45	22	65	30	20	20	50	7	8	21	0.080	R02–70
30	60	28	95	40	30	30	75	9	8	31	0.190	R03–70
40	72	35	95	50	40	40	75	9	10	41	0.340	R04–70
50	82	40	120	60	50	50	100	9	10	51	0.585	R05–70

T-Swivel Clamp

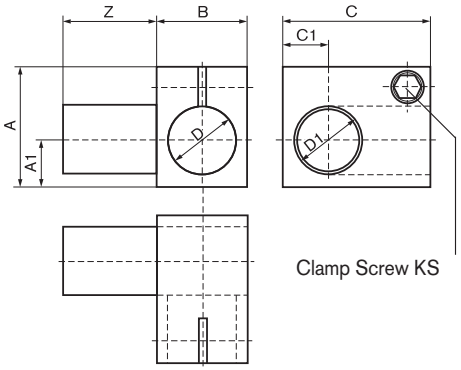

Use
Chiefly used where tubes coming out of the joint must be swivelled in connection with all the other clamp joints.

Nominal Diameter	Dimensions A	A1	B	B1	C	D1	I	O	P	Z	Weight in kg	Order Number
12	24	8	16	30	9	12	12	17	M4	–	on request
20	36	13	30	45	13	20	20	31	M6	0.100	R02–13
30	52	20	40	65	20	30	30	41	M8	0.255	R03–13
40	62	25	50	85	25	40	40	51	M8	0.435	R04–13
50	72	30	60	105	30	50	50	61	M8	0.700	R05–13

For diameter D tolerances, see page 233

Cross Swivel Clamp

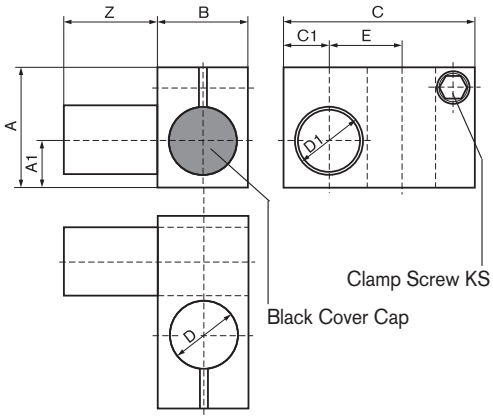

Use

To brace structures with oblique tube connections; also used like the T-swivel clamp.

Nominal Diameter	Dimensions A	A1	B	C	C1	D	D1	E	Z	KS	Weight in kg	Order Number
12	24	8	16	38	9	12	12	13	17	M4	–	on request
20	36	13	30	58	13	20	20	22	31	M6	0.115	R02-14
30	52	20	40	84	20	30	30	32	41	M8	0.275	R03-14
40	62	25	50	104	25	40	40	42	51	M8	0.440	R04-14
50	72	30	60	124	30	50	50	52	61	M8	0.670	R05-14

For diameter D / D1 tolerances, see page 233

Horizontal Support

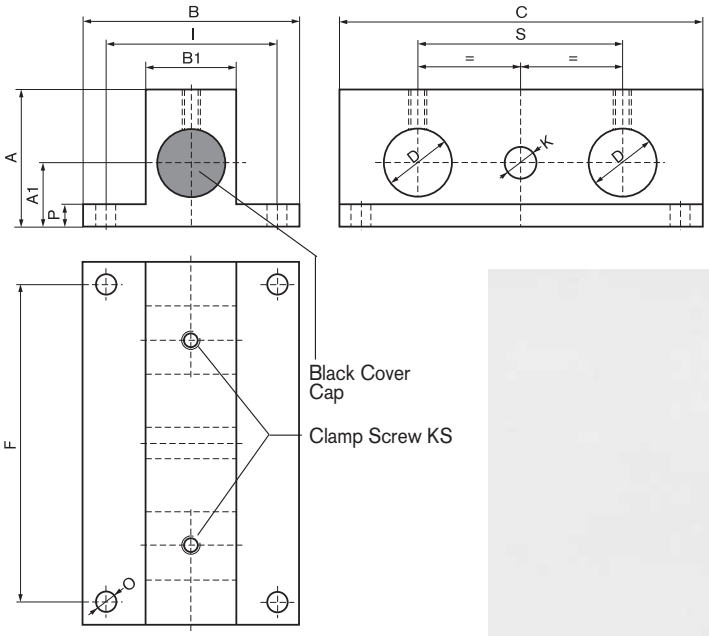

Use

The Horizontal Support is usually needed to close off adjustable units. However, it can also be used independently as a static or dynamic clamp.

Nominal Diameter	Dimensions A	A1	B	B1	C	D	F	I	K	O	P	S	Weight KS	in kg	Order Number
20	45	22	65	30	110	20	95	50	10	7	8	60	M6	0.360	R02-90
30	60	28	95	40	160	30	140	75	14	9	8	90	M8	0.845	R03-90
40	72	35	95	50	200	40	180	75	14	9	10	120	M8	1.390	R04-90

Other combinations on request; for diameter D tolerances, see page 233

Vertikal Support

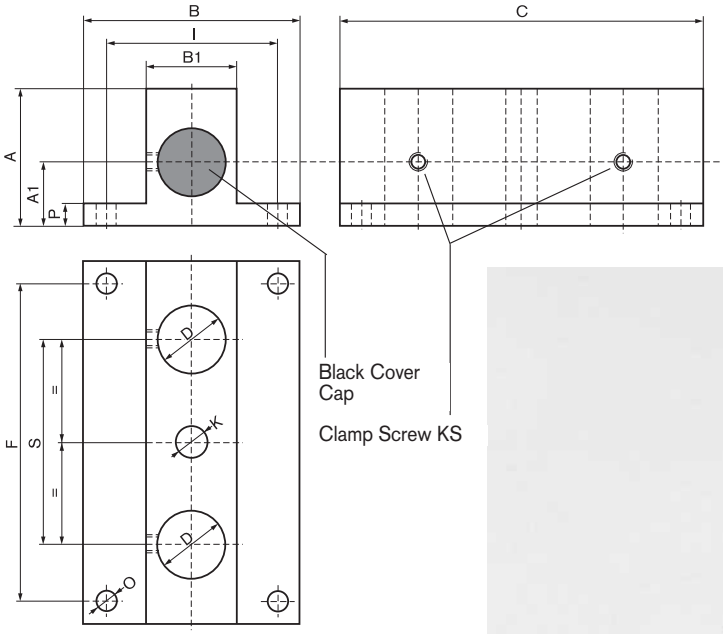

Use

The same uses as the Horizontal Support. It can also be used as a carrier for handling equipment which needs to be rearranged simply and quickly.

Nominal Diameter	Dimensions A	A1	B	B1	C	D	F	I	K	O	P	S	Weight KS	in kg	Order Number
20	45	22	65	30	110	20	95	50	10	7	8	60	M6	0.330	R02-91
30	60	28	95	40	160	30	140	75	14	9	8	90	M6	0.760	R03-91
40	72	35	95	50	200	40	180	75	14	9	10	120	M6	1.225	R04-91

Other combinations on request; for diameter D tolerances, see page 233

Universal Support

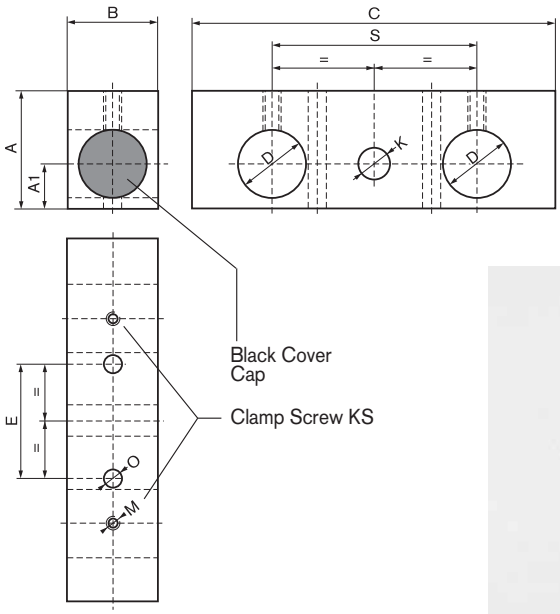

Use

Same use as the Supports shown on pages 221 and 222, but with the advantage that this component can be used as a Horizontal and Vertical Adjustable Unit.

Nominal Diameter	Dimensions A	A1	B	C	D	E	O	K	S	KS	Weight in kg	Order Number
20	36	13	30	110	20	25	6.5	10	60	M6	0.190	R02-30
30	52	20	40	160	30	50	8.5	14	90	M8	0.520	R03-30
40	62	25	50	200	40	50	8.5	14	120	M8	0.870	R04-30

Other combinations on request; for diameter D tolerances, see page 233

Universal Slides

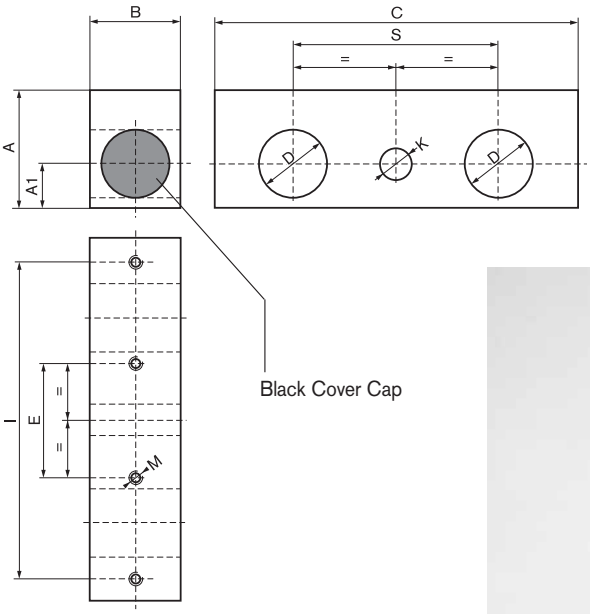

Illustration with clamp and sliding bush

Illustration without clamp

Use

Simple adjustable units can be built in modular form, in combination with the Supports on pages 221, 222 and 223. The four threads are used to fix other structures in place.

Nominal Diameter	Dimensions A	A1	B	C	D	E	I	M	K	S	Weight in kg	Order Number single-sided clamp	Order Number double-sided clamp	Order Number without clamp
20	36	13	30	110	20	25	95	M6	10	60	0.200	R02-31 **(-GL)***	R02-32 **(-GL)***	R02-41 **(-GL)***
30	52	20	40	160	30	50	140	M8	14	90	0.535	R03-31 **(-GL)***	R03-32 **(-GL)***	R03-41 **(-GL)***
40	62	25	50	200	40	50	180	M8	14	120	0.870	R04-31 **(-GL)***	R04-32 **(-GL)***	R04-41 **(-GL)***

* On request, we can supply the slide with sliding bushes: **add -GL to the order number**

Adjustable Units

The KANYA Adjustable Units have been specifically developed with LOW COST in mind. The modular kit principle means that joints can be assembled at reasonable prices. The customer is free to choose according to his requirements – the Adjustable Unit still remains a standard item.
The selection includes three sizes with different adjustment ranges. The spindle end is manufactured according to your specifications, or is fitted with a handwheel.

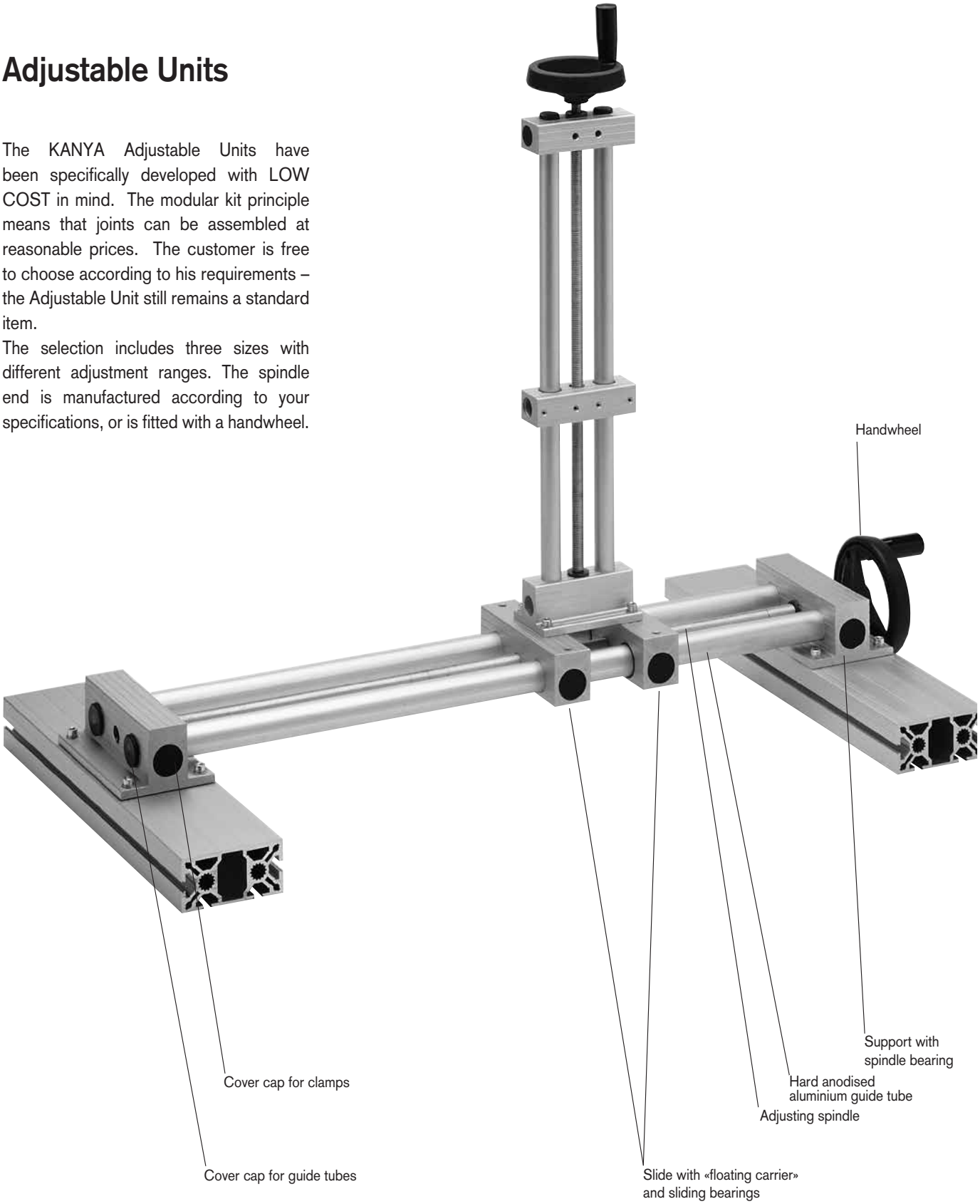

Ordering Information

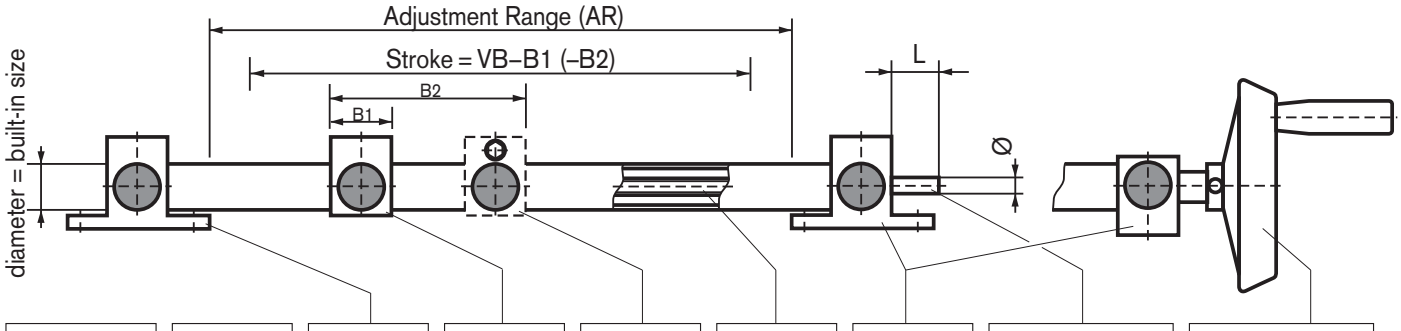

Built-in size	AR	Support A	Slide 1	Slide 2	Spindle	Support B	Shaft end dia. x L	Handwheel option
V E –							Ø x	H R Ø

Examples:

V E – 2 0	1 2 5 0	9 0	3 1	– –	M 1 2	9 0	Ø 1 0 x 2 0	
V E – 4 0	2 3 0 0	9 1	3 1	4 1	T R 1 6	3 0	– – – – – –	H R Ø 1 6 0

Warehouse items	Stroke	Support A/B	Slide 1/2	Spindle	Shaft end	Handwheel
VE20	–1500	R02-90 / -91 / -30	R02-31-GL / -41-GL	M12 x 1.75 / TR 12 x 3	as indicated	HR - Ø 80 / Ø 100
VE30	–2000	R03-90 / -91 / -30	R03-31-GL / -41-GL	M16 x 2.0 / TR 16 x 4	as indicated	HR - Ø 125
VE40	–2500	R04-90 / -91 / -30	R04-31-GL / -41-GL	M20 x 2.5 / TR 20 x 4	as indicated	HR - Ø 160 / Ø 200
		See pages 221 – 224 for measurement information on the Supports and Slides		Other diameter and inclinations on request		

KANYA supplies the Adjustable Units fully assembled.
Please enquire about additional items which we are able to supply.

Adjustable Units

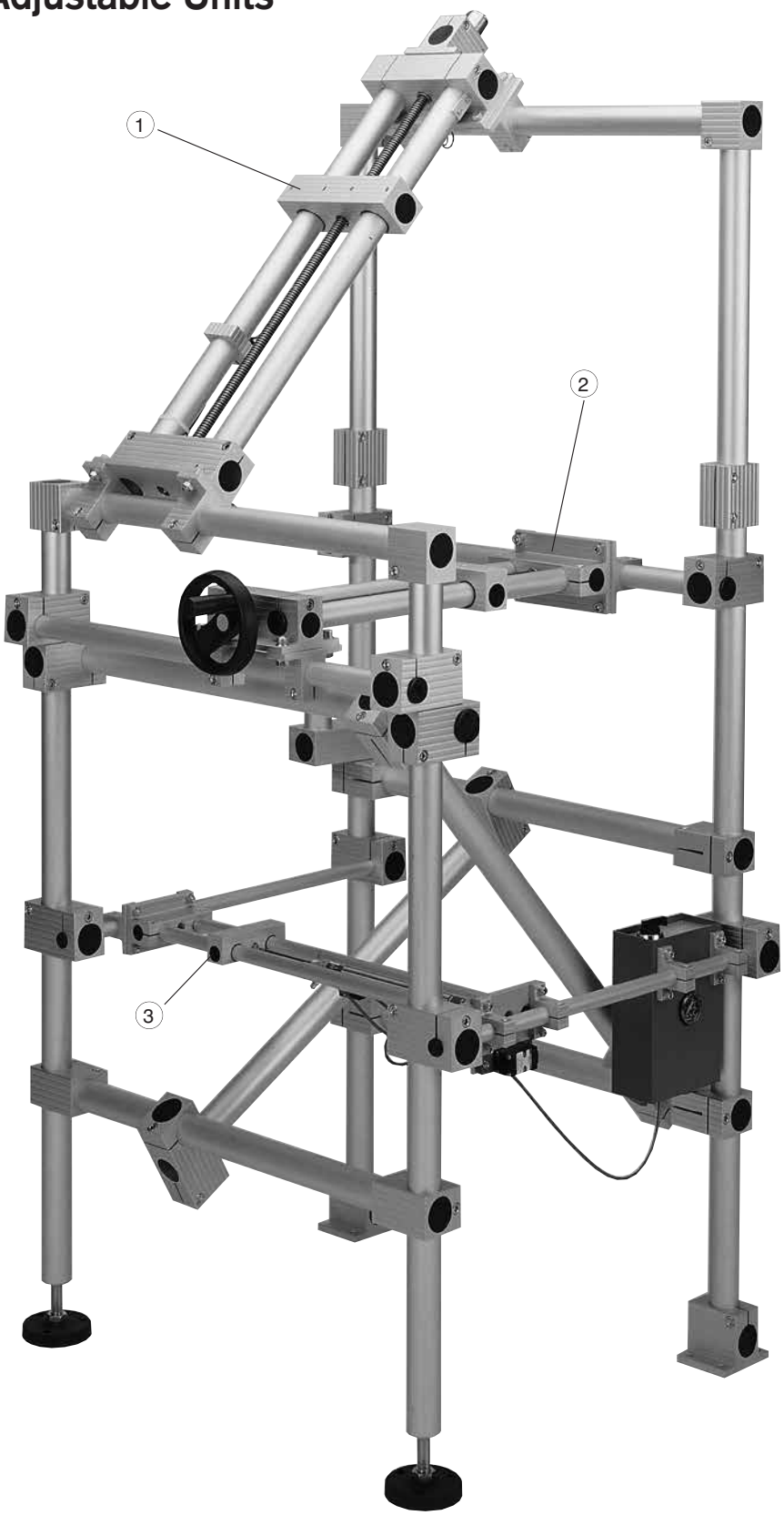

Use

Simple adjustment mechanisms with average precision and normal phase times. This adjustable unit is robust and reliable, and can be used wherever costs need to be kept down or wherever cost-effectiveness is the decisive factor.

Mechanical engineering, automation, laboratories, photographic studios, table adjustments, etc.

Versions

1. with metric threaded spindle
2. with trapezoidal threaded spindle and handwheel
3. with pneumatic cylinder

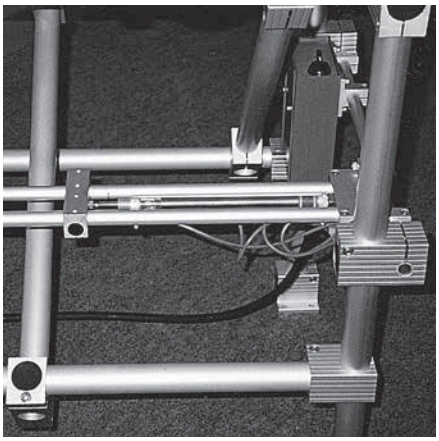

...or to your specifications.

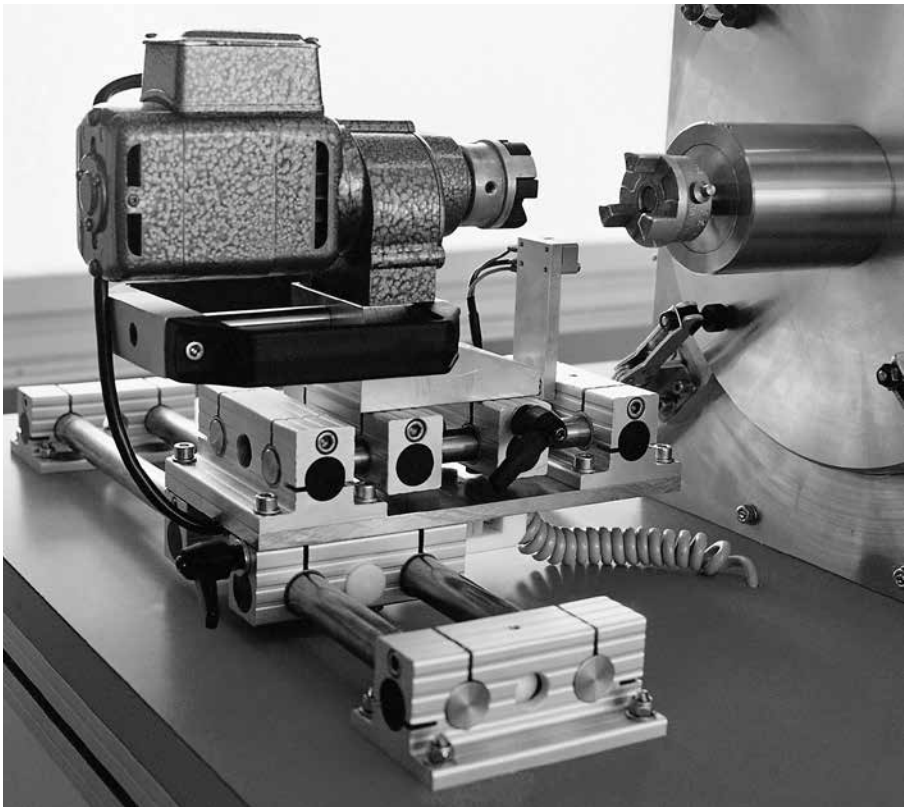

Use

Couplable / decouplable drive on an X/Y adjustable unit for a micro-coating drum.

The electric motor is in the decoupled position.

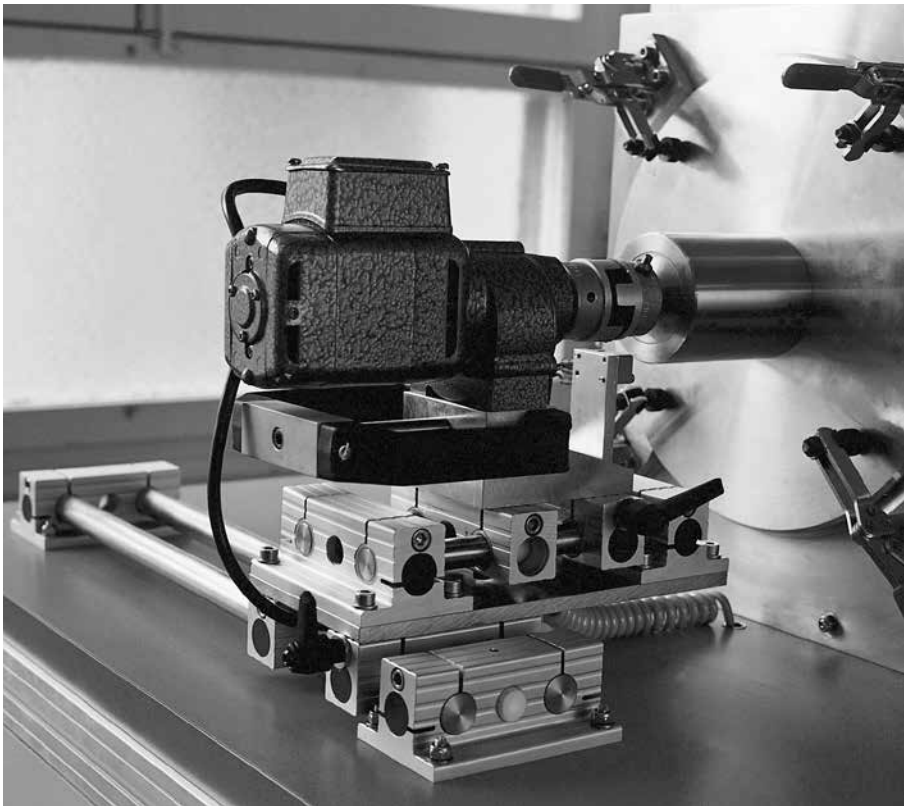

The electric motor is in the coupled position.

Rectangular Extrusions

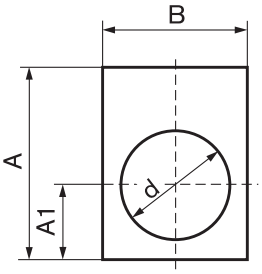

Can be supplied in warehouse length or cut to size.

Surface: untreated

Nominal Diameter	Dimensions A	A1	B	d	Weight kg/m	Order Number L = 3000 mm	Order Number cut to . . . mm
12	24	8	16	11,3	0.76	R01–95–00/3000 mm	R01–95–02/ ... mm
20	36	13	30	19,2	2.10	R02–95–00/3000 mm	R02–95–02/ ... mm
30	52	20	40	29,2	3.70	R03–95–00/3000 mm	R03–95–02/ ... mm
40	62	25	50	39,2	4.96	R04–95–00/3000 mm	R04–95–02/ ... mm
50	72	30	60	49,3	6.34	R05–95–00/3000 mm	R05–95–02/ ... mm

Flange Extrusions

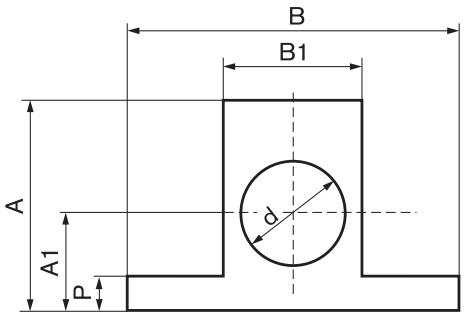

Can be supplied in warehouse length or cut to size.

Surface: untreated

Nominal Diameter	Dimensions A	A1	B	B1	d	P	Weight kg/m	Order Number L = 3000 mm	Order Number cut to . . . mm
12	28	12	35	16	11,0	4	1.11	R01–96–00/3000 mm	R01–96–02/ ... mm
0	45	–	65	30	–	8	4.35	R15–94–00/3000 mm	R15–94–02/ ... mm
20	45	22	65	30	19.0	8	3.63	R02–96–00/3000 mm	R02–96–02/ ... mm
30	60	28	95	40	27.0	8	5.88	R03–96–00/3000 mm	R03–96–02/ ... mm
40	72	35	95	50	39.0	10	7.63	R04–96–00/3000 mm	R04–96–02/ ... mm
50	82	40	120	60	49.0	10	9.71	R05–96–00/3000 mm	R05–96–02/ ... mm

Aluminium Tubes

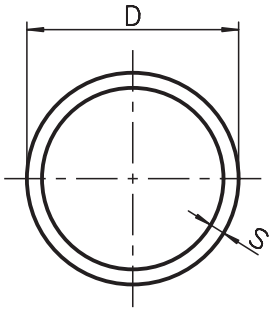

Can be supplied in warehouse length or cut to size.

Surface: untreated

Nominal Diameter	Dimension D1 x S	Weight kg/m	Order Number L = 5000 mm	Order Number cut to . . . mm
12	12 x 1.5	0.130	R01-97-00/5000 mm	R01-97-02/ ... mm
20	20 x 2	0.310	R02-97-00/5000 mm	R02-97-02/ ... mm
30	30 x 2	0.480	R03-97-00/5000 mm	R03-97-02/ ... mm
40	40 x 2	0.650	R04-97-00/5000 mm	R04-97-02/ ... mm
50	50 x 3	1.210	R05-97-00/5000 mm	R05-97-02/ ... mm

For diameter D tolerances, see page 233

Threaded Inserts

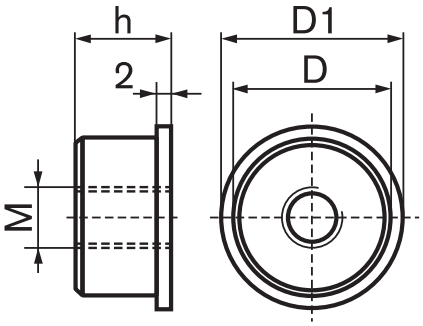

For aluminium tubes.

Material: aluminium

Nominal diameter	Dimensions D	D1	h	M	Order Number
20	16	20	15	M10	R14-20
30	26	30	15	M10	R14-30
40	36	40	20	M16	R14-40
50	44	50	20	M16	R14-50

Levelling Feet

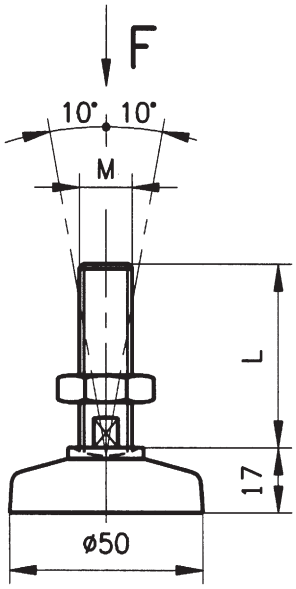

Use
Continuous height adjustment and level compensation. KANYA levelling feet with diameter 50 are fitted with M10 or M16 threads of length 50 or 100 respectively. The setting screw is connected to the flange cup so as to allow play of ±10°, which compensates for uneven floors.

Construction
Flange cup: PA-GF, black
Screw: 8.8 galvanized steel

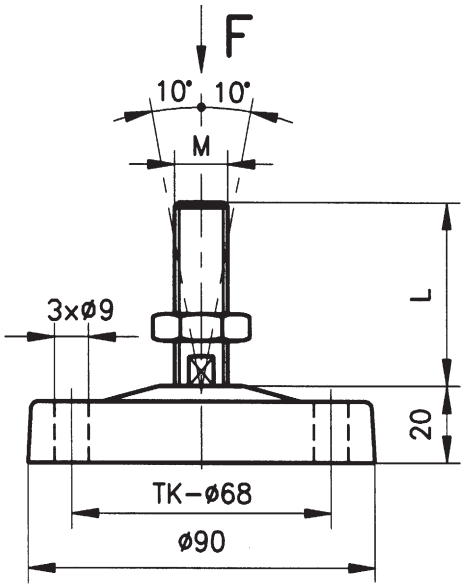

see also on page 164–165

	Levelling Flange Diameter	Dimension: Thread M x L	Load Capacity F	Order Number with 3 x Ø9	Order Number without 3 x Ø9
PA-GF	50	10 x 50	2500 N		B 42–50
	50	10 x 100	2500 N		B 42–00
	50	16 x 50	3500 N		B 44–50
	50	16 x 100	3500 N		B 44–00
	90	16 x 50	5000 N		B 45–50
	90	16 x 100	5000 N		B 45–00
Aluminium	90	16 x 50	10000 N	B 45–51	B 45–52 **(–D)***
	90	16 x 100	10000 N	B 45–01	B 45–02 **(–D)***

* These versions are also available with damping components: add -D to the order number.

Wheels

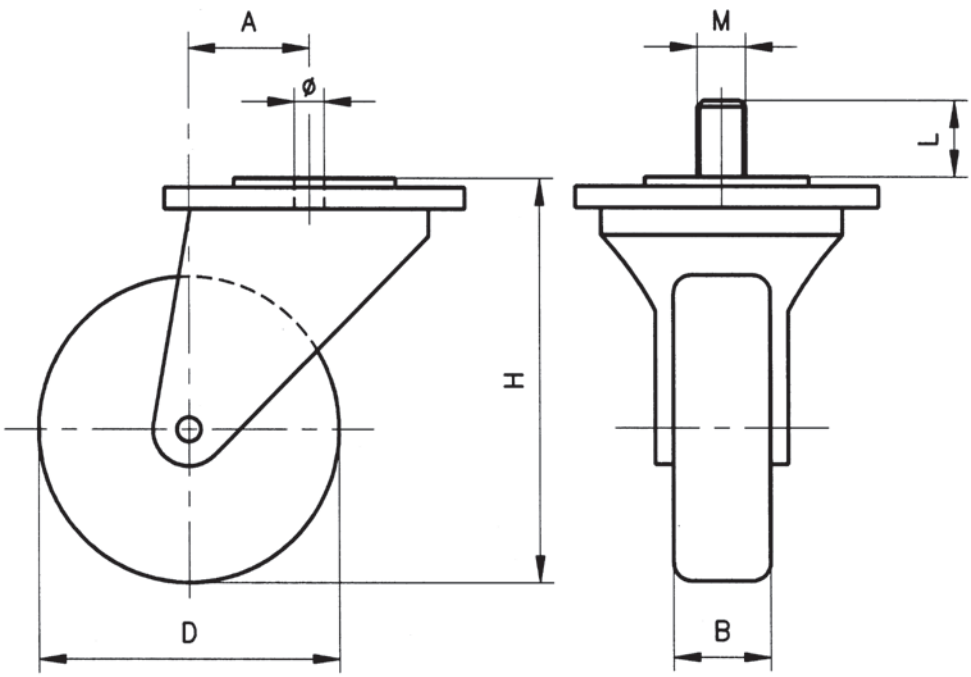

Use
Can be used universally, wherever mobility is required. A choice of two wheel diameters with or without brake is available, depending on the load requirement.
A 10.3 diameter through hole, or the M16 x 25 threaded stem make them simple to fit on to the tubes.

Construction:
Shackle: Galvanized steel, ball bearing
Wheel: Rubber running wheel, ball bearing
Strength: diameter 50 = 400 N
diameter 75 = 700 N
diameter 100 = 800 N
diameter 125 = 1000 N

see also on page 169

Wheel	Dimensions D	B	H	A	Thread dia. / M x L	Order Number without Brake	Order Number with Brake
Wheel	50	18	70	25	Ø 10,3	B 48-50	B 49-50
Wheel	75	25	97	30	Ø 10,3	B 48-75	B 49-75
Wheel	100	32	132	42	Ø 10,3	B 48-100	B 49-100
Wheel	100	32	132	42	M 16 x 25	A 48-100	A 49-100
Wheel	125	32	158	42	Ø 10,3	B 48-125	B 49-125
Wheel	125	32	158	42	M 16 x 25	A 48-125	A 49-125

Other dimensions and conductive wheels can be supplied on request

Plastic Caps

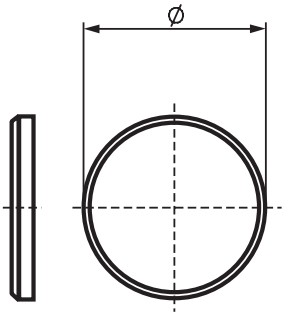

For Tube Clamps

Nominal diameter	Order Number
20	R10–20
30	R10–30
40	R10–40
50	R10–50

The tube clamp units are generally supplied with plastic caps.

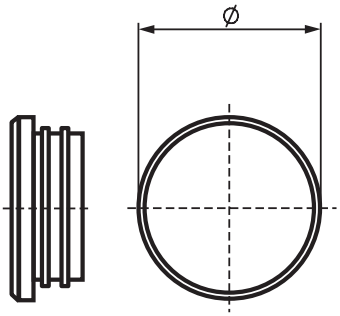

For Aluminium Tubes

Nominal diameter	Order Number
20	R11–20
30	R11–30
40	R11–40
50	R11–50

Clamp Lever

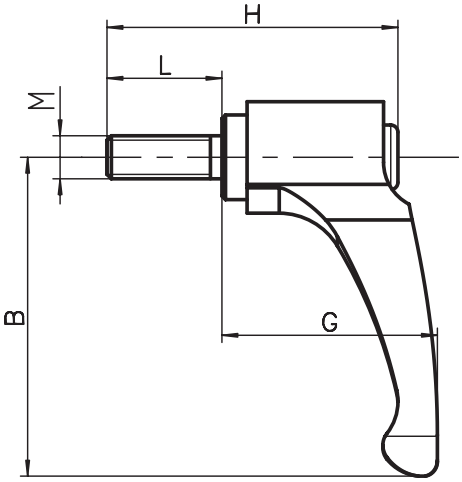

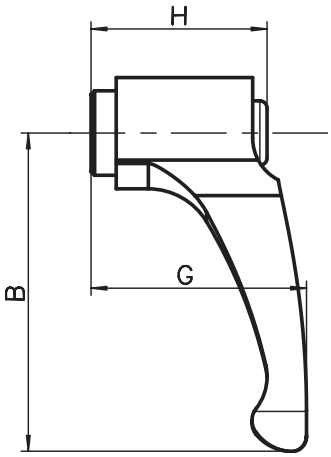

All tube clamp elements can also be supplied with clamp levers:

Add ...-K or ...-2K to the order number.

Nominal Thread M	Dimensions: B	G	H	L	Order Number
M6	45	29	25	–	R65–60
M6	45	29	25	16	R65–62
M6	45	29	25	32	R65–63
M8	63.5	38	31	–	R65–80
M8	63.5	43.5	38.5	20	R65–82*
M8	63.5	38	31	40	R65–84

*Lever: plastic

Index

Headquater

CH **KANYA AG**
Neuhofstrasse 9,
8630 Rüti ZH, Schweiz
Tel: +41 (0)55 251 58 58
Fax: +41 (0)55 251 58 68
info@kanya.ch
www.kanya.com

Branch office

RC **KANYA China Ltd.**
32 Hongxi Road, Suzhou,
Jiangsu 215151, China
Tel: 0086 (0) 512 65360065
Fax: 0086 (0) 512 65360906
info@kanya.com.cn
www.kanya.com

Representatives

A **Ventor Sicherheitssysteme und Automatisierung**
Falkenau 11, 4690 Schwanenstadt,
Oberösterreich, Österreich
Tel: +43 (0)7673 80511-0
verkauf@ventor.at
www.ventor.at

B **M.A.M. Industrie S.A.**
Rue de la Station 11,
B-1435 Mont-Saint-Guibert
Tel: + 32 10 65 70 12
m.a.m.industrie@skynet.be
www.mamindustrie.com

BR **ABG Indústria e Comércio Ltda.**
Avenida das Araucárias 509,
83707-642 Araucária - Paraná
Tel: +55-41-3643-1384
info@abg.ind.br
www.kanya.com.br

CZ **Visimpex a.s.**
Seifertova 33, CZ-750 02 Prerov, Tschechien
Tel: +42 - (0)581/808 134
kanya@visimpex.cz
www.kanya.cz

D **August Dreckshage GmbH & Co. KG**
Vertriebsgebiet: PLZ 1, 2, 3, 4, 5
Walter-Werning-Straße 7,
D-33699 Bielefeld
Tel: +49 (0)521 9259-0
info@dreckshage.de
www.dreckshage.de

D **KANYA Deutschland GmbH**
Vertriebsgebiet: PLZ 0, 35, 54-56, 6, 7, 8, 9
Meußelsdorfer Straße 25,
95615 Marktredwitz, Germany
Tel: +49 - (0)9231 - 603 860
info@kanya-deutschland.de
www.kanya-deutschland.de

DK **JJ Mechatronic A/S**
Industriparken 17, DK-4450 Jyderup
Tel: +45 - 59/25 81 00
info@jjas.dk
www.jjas.dk

F **Bernay Automation SA**
B.P. 451-1, Rue de Menneval
27300 Bernay, France
Tel: +33 - 232/473 510
info@bernay-automation.com
www.bernay-automation.com

GB **Thinking Space Systems LTD.**
Unit 10b, The Quadrangle, Abbey
Park Industrial Estate, Romsey,
Hampshire SO51 9DL
Tel: +44 - (0)1794 516633
kanya@thinking-space.com
www.kanya-uk.co.uk

I **Meccania S.R.L.**
C.so Lombardia, 41
I-10078 Venaria Reale (TO)
Tel: +39 011 455 11 21
info@meccania.com
www.meccania.com

IL **Conlog LTD.**
Ha-Mefalsim St. 17,
Petach-Tikva, Israel 4951447
Tel: +972-3-9269595
conlog@conlog.co.il
www.conlog.co.il

J **MIWA CO. LTD.**
Jusanzukacho 4-12, Kasugai,
Aichi 486-0815, Japan
Tel: +81-568-29-8883
postmiwa@miwa-inc.co.jp
www.miwa-inc.co.jp

NL **TEVEL Techniek bv**
Mollevite 24, 6931 KG Westervoort
Tel: +31-(0) 26 303 00 60
info@tevel.nl
www.tevel.nl

PL **TABAL Sp.J.**
Energetykow 14, PL-20-468 Lublin
Tel: +48 - (0)81/749 09 11
kanya@tabal.pl
www.tabal.pl

PL **JORDAN matcon Sp. z o.o.**
Kijewo 50, 63-000 Sroda Wlkp.
Tel: +48 61/286-07-00
info@jordan-matcon.pl
www.jordan-matcon.pl

RC **Chongqing Holje Precision Machinery Co. Ltd.**
Yubei, Huixing, 401120 Chongqing, China
Tel: 0086 23 67802495
www.kanya.com

RO **ARDACO TEHNIC METAL**
Str. Valea Barbusii 1, Campulung, Arges,
Romania 115100
Tel: +40 248 533 436
office@ardacometal.ro
www.ardacometal.ro
www.kanya.ro

RU **Servotechnica**
Volgogradskiy prospekt 22, Moskau
Tel: +7 (495) 797-88-66
info@servotechnica.ru
www.servotechnica.ru

S **EIE Maskin AB**
BOX 7, 124 21 Bandhagen
Tel: +46 8 727 88 00
info@eie.se
www.eie.se

SK **Visimpex a.s.**
Seifertova 33, CZ-750 02 Prerov, Tschechien
Tel: +42 - (0)581/808 134
kanya@visimpex.cz
www.kanya.cz

TN **HR-ENGINEERING Sàrl**
Foundouk Jedid 8012
Tel: (+216) 72 399 106
info@hrengineering-tn.com
www.hrengineering-tn.com

USA **A-Line Corporation**
5410 Powerhouse Court,
USA-Concord NC 28027
Tel: (704) 793 1602
sales@aline1.com
www.aline1.com

Internationally registered trademarks:

Certificate of Approval:

SN EN ISO 9001: 2008

Indications

Patent
This catalogue contains products that are subject to international patent rights. Any imitation of such products constitutes a violation of the law and involves compensation for damages.

Product liability
KANYA's product liability is subject to Swiss substantive law only. KANYA is not liable for any further claims and in particular denies liability for copied products or own application of our products by the user.

Kanya AG/SA/ Ltd.
Neuhofstrasse 9
CH-8630 Rüti
Schweiz

Telefon +41 (0)55 251 58 58
Telefax +41 (0)55 251 58 68

e-mail info@kanya.com
Internet www.kanya.com

E-CH/10-2016 – 500